Lanesboro City Council
Regular Meeting Agenda
Monday, April 6, 2026 at 6:00 p.m.
Lanesboro Community Center – City Council Chambers

Zoom is provided as a way to offer more accessibility to council and committee meetings. Full functionality is not guaranteed.
https://us02web.zoom.us/j/81676938481?pwd=ji7e6xXBzqYeyWhu4JoIeVZxTEPIPJ.1
Meeting ID: 816 7693 8481 | Passcode: 803467

Call the Regular Meeting to Order

A. Agenda Approval
Motion _____ **Second** _____
B. Public Comments
C. Approval of Minutes
   a. Minutes of Regular Meeting, March 2, 2026
Motion _____ **Second** _____
D. Consent Agenda
   a. Accounts Payable
   b. Resolution 2026-30 – Certifying Unpaid Utility Charges
   c. Resolution 2026-31 - Accepting Donations to the Lanesboro Fire Department
   d. Approve City Administrator Attendance of Minnesota Municipal Clerks Institute – Year 2
   e. Approve Independence Day Parade on Parkway Avenue – 07/04/2026 at 1:30 p.m.
Motion _____ **Second** _____

Presentation of 2025 Audit and Financial Statements for Year Ended December 31, 2025

Continued Business

A. The meeting will be closed due to Attorney-Client privilege to discuss active or pending litigation pursuant to Minn. Stat. 13D.05 Subd. 3(b). The purposes served by the attorney-client privilege outweigh those served by the open meeting law and dictates the need for absolute confidentiality. The City is discussing litigation strategies with legal counsel regarding a contract dispute with Sparrow Valley Properties, LLC. Absolute confidentiality is necessary as open discussion of litigation strategy could reveal the City's strategy or jeopardize any potential resolution related to the current dispute.
Motion _____ **Second** _____
B. Consider Fire Department Purchase Request – Badges
Motion _____ **Second** _____

New Business

A. Consider Fire Department Uniform Allowance Policy
Motion _____ **Second** _____
B. Consider Request to Ratify Lanesboro Fire Relief Association Pension Benefit Level
Motion _____ **Second** _____
C. Discuss Request from Lanesboro Fire Relief Association Regarding Donated Funds
Motion _____ **Second** _____
D. Consider Purchase of Lawnmower
Motion _____ **Second** _____
E. Consider Purchase of Dishwasher for City Hall
Motion _____ **Second** _____
F. Consider Purchase and Sharing Agreement for DuraPatcher
Motion _____ **Second** _____
G. Consider Amendments to MnDOT Partnership Agreement for TH250 Project
Motion _____ **Second** _____
H. Accept 2025 Audit and Financial Statements for Year Ended December 31, 2025
Motion _____ **Second** _____

I. Discuss Ordinance 116 – Regulating Lawful Gambling
Motion _____ Second _____

J. Consider Alternative Date for May 4, 2026 City Council Meeting
Motion _____ Second _____

Adjourn Regular Meeting

Lanesboro City Council
Regular Meeting Minutes
Monday, March 2, 2026 – 6:00 p.m.
Lanesboro City Council Chambers

Present Members:
☒ Mindy Albrecht-Benson ☒ Chase Bakke ☒ Joe Cullen ☒ Alicia Pearson ☒ Kathryn Wade
Staff:
☒ Mitchell Walbridge ☒ Darla Taylor ☐ David Haugen ☐ Mark Lawstuen ☐ Jerod Wagner
☒ Joseph O'Koren ☐ Michelle Marotzke

Mayor Pearson called the regular meeting of the Lanesboro City Council to order at 6:00 p.m.

A. Agenda Approval: A motion was made by Member Albrecht-Benson to approve the agenda as presented; Member Wade seconded the motion. All city council members voted in favor; Motion carried.

B. Public Comments:
- **a.** Sandy Webb shared information about the Lanesboro Community Theatre's upcoming community reading sessions of *A Wrinkle in Time*.

C. Consent Agenda:
- a. Accounts Payable
- b. Resolution 2026-25 – Accepting Donations to the Lanesboro Fire Department
- c. Resolution 2026-26 – Accepting Donations to the Lanesboro Public Library
- d. Resolution 2026-27 – Authorizing Application to the Clean Water Revolving Fund for the TH250 Rehab Collection System Project
- e. Resolution 2026-28 – Authorizing Application to the Drinking Water Revolving Fund for the TH250 Watermain Replacement Project
- f. Resolution 2026-29 – Authorizing Application to the Drinking Water Revolving Fund for the Lead Service Line Replacement Project
- g. Buffalo Bill Days Fireworks Permit

A motion was made by Member Albrecht-Benson to approve the Consent Agenda; Mayor Pearson seconded the motion. All city council members voted in favor; Motion carried.

Department Updates

A. Fire Department: Fire Chief Robert Wagner presented an annual department update to the City Council.
- There were 23 calls in rural townships and 7 calls within city limits during 2025.
- The department conducted training sessions in 2025 that included swift water rescue, SCBA smoke trailer, electric car fires, grain bin extrication, radio training, CPR training, and pumper training.
- C.D. Hanson was appointed as a new member.
- The department conducted 5 CRP burns that acted as additional training opportunities.
- Future capital purchases include replacement of the SCBAs and a new first responder truck.

B. Police Department: Police Chief Blaise Sass provided an annual department update to the City Council.
- Recent vehicle replacements include at 2026 Chevy Silverado which will replace the Chief's squad vehicle, and a 2026 Dodge Durango has arrived replacing one of the deputy squad vehicles.
- Two part-time officers were hired in October of 2025, though one of them took a full-time employment opportunity with the Fillmore County Sheriff's Office.

- The 2025 call volume was an estimated 1,600 Incident Case Reports. Police Chief Sass noted that there has been a significant increase in calls centered on fraud, scams, or identity theft.

Continued Business

A. **Discuss Tax Abatement and Development Agreement – Sparrow Valley Properties, LLC:** City Administrator Mitchell Walbridge stated that a 30-day Notice to Cure was sent to Sparrow Valley Properties, LLC on February 4, 2026. As of the City Council meeting, Sparrow Valley Properties, LLC remains out of compliance with Events of Default noted in the Tax Abatement and Development Agreement. Specifically, Events of Default not in compliance include delinquency of property tax payments for collection years 2024 and 2025, delinquent utility charges, no submitted evidence that plumbing code violations have been resolved, and multiple payment periods past due on a loan issued by the City of Lanesboro's Economic Development Authority. Administrator Walbridge asked the City Council to consider the City's next steps in contract enforcement if the Events of Default are not cured by the March 06, 2026 deadline. Administrator Walbridge explained that the next enforcement actions to be considered would be terminating the Tax Abatement and Development Agreement and calling the loan due in full. City Attorney Joseph O'Koren explained that there is a considerable timeline on executing the dissolution of the Agreement.
A motion was made by Member Albrecht-Benson to terminate the Tax Abatement and Development Agreement and call the loan balance due in full if the Events of Default are not cured by the March 06, 2026 deadline; Member Wade seconded the motion. During discussion, members questioned whether there was an alternative pathway to work with Sparrow Valley Properties, LLC, but also noted that no progress since the Notice to Cure was delivered.
Brooke Pfeffer, representing Sparrow Valley Properties, LCC, was recognized by Mayor Pearson to comment on the status of Events of Default. Pfeffer stated that they have not received abatement payments to pay property taxes for 505 Parkway Avenue South and utility charge delinquency is caused by poor rental tenants. Pfeffer stated she was not given a copy of the Department of Labor and Industry's findings on plumbing code violations until January 2026. Pfeffer also stated Sparrow Valley Properties, LLC did not have funds to pay the EDA loan. Pfeffer expressed frustration that city staff have not provided a plan to address the financial challenges Sparrow Valley Properties, LLC faces.
Administrator Walbridge explained that EDA assistance does not extend to correcting the financial situation of a private LLC or business. He stated that he would not direct Economic Development Director to work through any financial planning for a private entity unless the City Council gave him a direct order otherwise, which Administrator Walbridge did not recommend.
Following discussion, all members voted in favor of the motion; Motion carried.

New Business

A. **Consider Contract with STAR Energy Services for Data Collection:** Administrator Walbridge explained the Lanesboro Public Utilities Commission has put a moratorium on any new solar interconnection applications due to difficulty following a recent application. MiEnergy and its contracted electrical engineers have difficulty gauging how a new solar system affects the overall electric system in calculating how much back fed energy would hit various substations. The Public Utility Commission recommended approval of a contract with STAR Energy Services to complete data collection, which would in turn allow lifting the moratorium.
Under the proposed contract, the scope of services includes data collection of GPS location, pole heigh and class, primary structure configuration in accordance with RUS codes, conductor size and type, direction of feed, point-to-point sourcing for meters, and photographic documentation for primary collection components plus meters. The estimated cost is $33,570.
A motion was made by Member Albrecht-Benson to approve the proposed contract; Member Wade

DRAFT

seconded the motion. Member Bakke asked if Attorney O'Koren had reviewed the contract. Attorney O'Koren did not have any concerns. All city council members voted in favor; Motion carried.

B. **Consider Bids for TH250 Project Geotechnical Engineering Services:** Brian Malm, City Engineer from Bolton & Menk, Inc., explained addition information is needed to design the watermain and forcemain connections from TH250 across the river to Norway Drive. Original borings did not provide adequate information. Three bids were obtained, with the lowest bid submitted by Terracon at a cost of $14,300. A motion was made by Member Albrecht-Benson to award Terracon the contract for services based on its bid; Member Bakke seconded the motion. All members voted in favor; Motion carried.

C. **Consider Revolving Loan Fund Application for 3 Peas in a Pod, LLC:** Administrator Walbridge shared the EDA Board's recommendation for issuance of a $20,000 loan to 3 Peas in a Pod, LLC with a term of 7 years and 2 percent interest per annum. The proposal for loan funds is to help with start-up costs by replacing some freezer and refrigeration equipment. The business entity will be The Scoop, which is taking over operations on what was Another Time Ice Cream Parlor.
A motion was made by Mayor Pearson to approve the loan application with the terms recommended by the Lanesboro EDA Board; Member Wade seconded the motion. All city council members voted in favor; Motion carried.

D. **Consider Street/Parking Closure Application for Sylvan Brewing, LLC:** Administrator Walbridge stated that Sylvan Brewing is requesting renewal of its annual permit to close parking spaces in front of its building to accommodate mobile food units. Mayor Pearson noted not issues or complaints had been reported in the last 12 months. A motion was made by Member Albrecht-Benson to approve the application for permit renewal; Member Wade seconded the motion. All city council members voted in favor; Motion carried.

E. **Consider Fire Department Request – Badges:** Fire Chief Robert Wagner presented a proposal requesting approval to purchase badges for fire department members. Chief Wagner explained the badges are worn at formal trainings events as well as retired department members' funerals. Chief Wagner also stated that ordering badges for new members has been something that has lapsed as transitions of fire chiefs have occurred. Member Albrecht-Benson asked if there were more cost-effective alternatives and whether the badges are returned to allow use by new members when a member leaves the department. Member Cullen also questioned whether a less expensive alternative has been explored.
Administrator Walbridge suggested that he work with Chief Wagner to develop a uniform policy prior to the purchase so that the City Council can establish a clear expectation of clothing and uniform allowance that remains consistent.
A motion was made by Member Albrecht-Benson to table discussion until the April meeting at which time a draft policy could be reviewed; Member Wade seconded the motion. All members voted in favor; Motion carried.

Mayor Pearson adjourned the meeting at 7:25 p.m.

Respectfully submitted,

Mitchell Walbridge
City Administrator/Clerk

DRAFT

CITY OF LANESBORO

Payments

Current Period: April 2026

Payments Batch 04062026PAY $22,155.28

Refer	202602301 *RITEWAY*		-			
Cash Payment	E 100-41500-210	Operating Supplies (GE				$220.43
Invoice	26-30487					
Transaction Date	3/13/2026		OPERATIONAL ACC	10100	**Total**	$220.43
Refer	202602302 *MN DEPT OF HEALTH*		-			
Cash Payment	E 235-49900-451	BBD General Expenses	MN Dept of Health Special Event Food License			$130.00
Invoice						
Transaction Date	3/13/2026		OPERATIONAL ACC	10100	**Total**	$130.00
Refer	202602303 *THE LINCOLN NATIONAL LIFE*		-			
Cash Payment	E 100-43100-134	Employer Paid Life				$40.02
Invoice						
Cash Payment	E 100-45200-134	Employer Paid Life				$33.95
Invoice						
Cash Payment	E 100-43100-134	Employer Paid Life				$16.43
Invoice						
Cash Payment	E 100-45200-134	Employer Paid Life				$16.43
Invoice						
Cash Payment	E 100-41500-134	Employer Paid Life				$28.41
Invoice						
Cash Payment	E 100-41500-134	Employer Paid Life				$42.62
Invoice						
Transaction Date	3/18/2026		OPERATIONAL ACC	10100	**Total**	$177.86
Refer	202602304 *UNIVERSITY OF MINNESOTA*		-			
Cash Payment	E 211-45500-233	Periodicals	BookPage Magazine			$39.65
Invoice	2170002057					
Transaction Date	3/18/2026		OPERATIONAL ACC	10100	**Total**	$39.65
Refer	202602305 *CANON FINANCIAL SERVICES INC*		-			
Cash Payment	E 100-41500-413	Office Equipment Rental				$151.85
Invoice	42885571					
Transaction Date	3/18/2026		OPERATIONAL ACC	10100	**Total**	$151.85
Refer	202602306 *EARL F. ANDERSEN*		-			
Cash Payment	E 100-43100-226	Sign Repair Materials				$175.94
Invoice	0142171-IN					
Transaction Date	3/18/2026		OPERATIONAL ACC	10100	**Total**	$175.94
Refer	202602307 *PADDLE ON COFFEE*		-			
Cash Payment	E 250-46500-445	EDA Project Developme				$30.00
Invoice					Project 2024-4	
Transaction Date	3/19/2026		OPERATIONAL ACC	10100	**Total**	$30.00
Refer	202602308 *HILLYARD/HUTCHINSON*		-			
Cash Payment	E 100-45200-210	Operating Supplies (GE				$685.14
Invoice	90076304					
Transaction Date	3/19/2026		OPERATIONAL ACC	10100	**Total**	$685.14
Refer	202602309 *EYE PRIZE MARKETING*		-			

CITY OF LANESBORO

Payments

Current Period: April 2026

Cash Payment	E 250-46500-445	EDA Project Developme			$600.00
Invoice 03182026				Project 2024-4	
Transaction Date	3/19/2026		OPERATIONAL ACC 10100	**Total**	$600.00
Refer 202602310 *PRESTON AUTO PARTS*			-		
Cash Payment	E 100-43100-210	Operating Supplies (GE			$29.94
Invoice 868339					
Cash Payment	E 100-43100-210	Operating Supplies (GE			$20.98
Invoice 869014					
Transaction Date	3/19/2026		OPERATIONAL ACC 10100	**Total**	$50.92
Refer 202602311 *PETTY CASH*			-		
Cash Payment	E 100-41500-322	Postage	Sparrow Valley		$6.08
Invoice					
Cash Payment	E 100-41500-322	Postage	Scalan House		$6.08
Invoice					
Transaction Date	3/19/2026		OPERATIONAL ACC 10100	**Total**	$12.16
Refer 202602312 *CITY OF PRESTON*			-		
Cash Payment	E 100-45200-350	Print/Binding (GENERA	1/4 page Visitors Guide Ad		$149.00
Invoice					
Transaction Date	3/19/2026		OPERATIONAL ACC 10100	**Total**	$149.00
Refer 202602313 *AMAZON CAPITAL SERVICES*			-		
Cash Payment	E 100-41500-210	Operating Supplies (GE	page protectors, USB cord		$30.52
Invoice 1CTQ-TG9H-DKC1					
Cash Payment	E 100-41500-210	Operating Supplies (GE	planner		$11.99
Invoice 1Q34-H3GF-QR7N					
Cash Payment	E 100-45200-210	Operating Supplies (GE	flag		$7.68
Invoice 1H1C-NW16-G1N1					
Cash Payment	E 100-41500-210	Operating Supplies (GE	legal pads		$7.99
Invoice 1TH9-PV3V-3KDW					
Transaction Date	3/19/2026		OPERATIONAL ACC 10100	**Total**	$58.18
Refer 202602314 *AFLAC*			-		
Cash Payment	G 100-21707	Aflac			$33.00
Invoice 407894					
Transaction Date	3/24/2026		OPERATIONAL ACC 10100	**Total**	$33.00
Refer 202602315 *MN ENERGY RESOURCES*			-		
Cash Payment	E 100-45170-380	Utility Services (GENER			$131.54
Invoice 5859401284					
Cash Payment	E 100-45200-380	Utility Services (GENER			$652.18
Invoice 5859970692					
Cash Payment	E 100-43100-380	Utility Services (GENER			$191.49
Invoice 5860207398					
Cash Payment	E 220-42000-380	Utility Services (GENER			$322.24
Invoice 5862617795					
Transaction Date	3/24/2026		OPERATIONAL ACC 10100	**Total**	$1,297.45
Refer 202602316 *TAFT*			-		
Cash Payment	E 100-41500-300	Professional Srvs (GEN	Establishing local sales tax		$1,800.00
Invoice 7040083					

CITY OF LANESBORO

Payments

Current Period: April 2026

Transaction Date	3/24/2026	OPERATIONAL ACC 10100		**Total**	$1,800.00
Refer 202602317 *LANESBORO PUBLIC UTILITIES*		-			
Cash Payment	G 307-20700 Due to Other Funds	2017A Bond Payments true up			$7,469.00
Invoice entry3					
Transaction Date	3/24/2026	OPERATIONAL ACC 10100		**Total**	$7,469.00
Refer 202602318 *MN PEIP*		Ck# 027524 3/25/2026			
Cash Payment	G 100-21705 Health Insurance	shortage on March Invoice1599472			$1,093.20
Invoice					
Transaction Date	3/24/2026	OPERATIONAL ACC 10100		**Total**	$1,093.20
Refer 202602319 *PRESTON EQUIPMENT COMPANY*		-			
Cash Payment	E 100-43100-210 Operating Supplies (GE				$50.20
Invoice 01-181804					
Transaction Date	3/25/2026	OPERATIONAL ACC 10100		**Total**	$50.20
Refer 202602320 *PADDLE ON COFFEE*		-			
Cash Payment	E 250-46500-445 EDA Project Developme	3/26 Meeting			$20.28
Invoice			Project 2024-4		
Transaction Date	3/26/2026	OPERATIONAL ACC 10100		**Total**	$20.28
Refer 202602321 *CITY OF LANESBORO*		-			
Cash Payment	E 250-46500-445 EDA Project Developme	3/26/26			$75.00
Invoice			Project 2024-4		
Transaction Date	3/26/2026	OPERATIONAL ACC 10100		**Total**	$75.00
Refer 202602322 *PALMER, ALISA*		-			
Cash Payment	E 250-46500-445 EDA Project Developme	3/26/26			$75.00
Invoice			Project 2024-4		
Transaction Date	3/26/2026	OPERATIONAL ACC 10100		**Total**	$75.00
Refer 202602323 *SEILER, MICHAEL*		-			
Cash Payment	E 250-46500-445 EDA Project Developme	3/26/26			$75.00
Invoice			Project 2024-4		
Transaction Date	3/26/2026	OPERATIONAL ACC 10100		**Total**	$75.00
Refer 202602324 *OKOREN LAW OFFICE LLC*		-			
Cash Payment	E 100-41500-304 Legal Fees				$2,032.47
Invoice 1629					
Transaction Date	3/27/2026	OPERATIONAL ACC 10100		**Total**	$2,032.47
Refer 202602325 *FILLMORE COUNTY TREASURER*		-			
Cash Payment	E 100-45200-480 Property Tax for Campgr	R.19.0338.030			$1,256.00
Invoice 2026 in full					
Cash Payment	E 100-43100-530 Improvements Other Th	special assessment R19.0080.010			$2,729.92
Invoice 2026 in full					
Transaction Date	3/27/2026	OPERATIONAL ACC 10100		**Total**	$3,985.92
Refer 202602326 *ACENTEK*		-			
Cash Payment	E 100-45200-321 Telephone				$41.37
Invoice 13422181					
Cash Payment	E 220-42000-321 Telephone				$113.60
Invoice 13422181					

CITY OF LANESBORO

Payments

Current Period: April 2026

Cash Payment	E 100-41500-321	Telephone			$149.90
Invoice 13422181					
Cash Payment	E 100-43100-321	Telephone			$64.95
Invoice 13422181					
Cash Payment	E 211-45500-321	Telephone			$86.48
Invoice 13422181					
Cash Payment	E 211-45500-321	Telephone			$1.24
Invoice 13429998					
Transaction Date	3/30/2026		OPERATIONAL ACC 10100	**Total**	$457.54
Refer	202602327	*ZEP MANUFACTURING COMPANY*	-		
Cash Payment	E 100-43100-210	Operating Supplies (GE			$146.13
Invoice 9012553169					
Transaction Date	3/30/2026		OPERATIONAL ACC 10100	**Total**	$146.13
Refer	202602328	*VISA*	-		
Cash Payment	E 211-45500-236	Program Expense			$52.08
Invoice					
Cash Payment	E 100-41110-208	Meetings / Trainings	Alicia-City Day on the Hill		$99.00
Invoice					
Cash Payment	E 100-41500-208	Meetings / Trainings			$3.99
Invoice					
Cash Payment	E 100-41500-208	Meetings / Trainings			$28.63
Invoice					
Cash Payment	E 100-41500-208	Meetings / Trainings	Lucky Mud League Meeting		$58.68
Invoice					
Cash Payment	E 100-41500-300	Professional Srvs (GEN			$102.90
Invoice					
Cash Payment	E 100-41500-300	Professional Srvs (GEN			$52.52
Invoice					
Cash Payment	E 100-41500-300	Professional Srvs (GEN			$407.76
Invoice					
Cash Payment	E 220-42000-321	Telephone	You Tube TV		$89.11
Invoice					
Cash Payment	E 100-41500-300	Professional Srvs (GEN			$3.99
Invoice					
Transaction Date	3/30/2026		OPERATIONAL ACC 10100	**Total**	$898.66
Refer	202602329	*BAKKE, CHASE*	-		
Cash Payment	E 220-42000-208	Meetings / Trainings	March28-29 mileage to Austin		$165.30
Invoice					
Transaction Date	3/30/2026		OPERATIONAL ACC 10100	**Total**	$165.30

CITY OF LANESBORO

Payments

Current Period: April 2026

Fund Summary

	10100 OPERATIONAL ACCOUNT
100 GENERAL FUND	$12,811.30
211 LIBRARY	$179.45
220 FIRE FUND	$690.25
235 BUFFALO BILL DAYS FUND	$130.00
250 EDA OPERATING	$875.28
307 2017A AUBURN/ZENITH	$7,469.00
	$22,155.28

Pre-Written Checks	$1,093.20
Checks to be Generated by the Computer	$21,062.08
Total	$22,155.28

CITY OF LANESBORO
RESOLUTION NO. 2026-30

A RESOLUTION CERTIFYING UNPAID CHARGES

WHEREAS, pursuant to proper notice duly given as required by law, the City Council has met, heard, and passed upon all objections to the proposed certifications of unpaid charges for municipal fees and utilities; and

WHEREAS, the amounts of bad debt have been minimized through diligent collection efforts by staff;

NOW THEREFORE, BE IT RESOLVED BY THE CITY COUNCIL OF THE CITY OF LANESBORO, MINNESOTA AS FOLLOWS:

Such proposed certification of unpaid charges, a copy of which is hereby attached as Exhibit 1 and made a part hereof, is hereby accepted and shall constitute a lien against the lands named herein.

Such certification shall be payable over a period of one year on or before the first Monday in January.

The owner of the affected property may, at any time prior to certification of unpaid charges to the County Auditor, pay the whole of the certified unpaid charges on such property, with interest accrued to date of payment, to the City Clerk/Administrator, except that no interest shall be charged if the entire certified amount is paid within thirty (30) days from the adoption of the resolution. The taxpayer may at any time thereafter, pay the County Auditor, the entire amount certified and remaining unpaid, with interest accrued to December 31, of the year in which payment is made. Such payment must be made before December 31, or interest will be charged through December 31 of the following year.

The clerk shall forthwith transmit a certified copy of this certification role to the County Auditor to be extended on the property tax lists of the county and such certified unpaid charges shall be collected and paid over in the same manner as property taxes

Passed by the City Council of Lanesboro, Minnesota this 6th day of April, 2026

_____
Alicia Pearson
Its: Mayor

Attested:

_____
Mitchell Walbridge
Its: City Administrator/Clerk

CITY OF LANESBORO
RESOLUTION NO. 2026-30
EXHIBIT 1

Certification Listing	Parcel Description	Service	Amount
Sparrow Valley Properties, LLC	505 Parkway Avenue South, Lanesboro, MN – Parcel ID 190259000	Water/Sewer/Electric	$3,905.39

(STATE OF MINNESOTA

COUNTY OF FILLMORE)) ss. Authentication Certificate

I, the undersigned, being the duly qualified City clerk of the City of Lanesboro, certify that the attached Resolution of the City Council adopting a certification for unpaid charges under the 54.05 Delinquent Charges Ordinance, is a true copy of the original, of which is on file at the City of Lanesboro.

Dated this 6th day of April, 2026

Seal

_____

City Administrator/Clerk
City of Lanesboro

CITY OF LANESBORO
RESOLUTION NO. 2026-31

A Resolution Accepting Donations to the Lanesboro Fire Department

WHEREAS, the City of Lanesboro is generally authorized to accept donations of real and personal property pursuant to Minnesota Statutes Section 465.03 for the benefit of its citizens; and

WHEREAS, the following persons and entities have offered to contribute the cash amount set forth below to the City of Lanesboro for the support of the Lanesboro Fire Department:

Name of Donor	Amount
Robert & Phyllis Penheiter	$100.00
Joseph & Susan Banken	$50.00
Derrick Hongerholt	$100.00
Leland Peterson	$50.00
John & Karen Lawstuen	$50.00
John Hungerholt	$100.00
Jane & Cliff Grevstad	$50.00
Pamela Niven	$50.00
Michell Redalen	$100.00
Susan Norby	$150.00
Jerome Deden & Mary Bell	$100.00
John & Jennifer Horihan	$10.00
Marilynne & Jonathan Evans	$50.00
Tammy Hughes	$50.00
Carol Painter	$25.00
Huntington Electric	$100.00

WHEREAS, all such donations have been contributed to assist the city in continued financial support for the Lanesboro Fire Department, as allowed by law; and

WHEREAS, the City Council finds that it is appropriate to accept the donation offered;

NOW THEREFORE, BE IT RESOLVED BY THE CITY COUNCIL OF THE CITY OF LANESBORO, MINNESOTA AS FOLLOWS:

1. The donations described above are accepted and shall be used towards Lanesboro Fire Department operational expenses, as allowed by law.
2. The City of Lanesboro is hereby directed to issue a receipt to the donor acknowledging the city's receipt of the donor's donation.

Passed by the City Council of Lanesboro, Minnesota this 6th day of April, 2026.

_____
Alicia Pearson
Its: Mayor

Attested:

_____
Mitchell Walbridge
Its: City Administrator/Clerk

MINNESOTA MUNICIPAL CLERKS INSTITUTE

The Institute Dates are: May 4 - 8, 2026 at the Heritage Center located in Brooklyn Center.

Cost to Attend: $640.00

2026 MMCI GRANT AWARDS
You must be a member of MCFOA to attend.

Please see below a 2026 Draft Schedule and the Grant Application

2026 MMCI Schedule - DRAFT.pdf

Grant Application -MMCI.pdf

General Program Description:

The Minnesota Clerks and Finance Officers Association (MCFOA) and St. Cloud State University's Center for Continuing Studies invite you to participate in the Minnesota Municipal Clerks Institute (MMCI or Institute). The MMCI is a three-year continuing education program leading to professional accreditation. Each year the Institute consists of a required five day, 40 hour curriculum, for a total of 120 hours of programming over the three year period. Once participants have completed the mandatory 120 hour curriculum, they become graduates of the Institute. This is an exceptional and internationally accredited program, for which SCSU is the only authorized provider in Minnesota. The International Institute of Municipal Clerks (IIMC) has set forth the guidelines and accredits the Institute. Clerks successfully completing the three year Institute program are awarded 50 points toward the Education requirements of the Minnesota Certified Municipal Clerk (MCMC) designation. Graduates must apply to the MCFOA for this certification,

showing 25 points in the Experience category and 3 years of active membership in the MCFOA in addition to their 50 Education points. MMCI graduates can also apply for certification from the International Institute of Municipal Clerks for the Certified Municipal Clerk (CMC) designation which requires 60 points in Education and 50 experiences points with two years of active membership in the IIMC. **THE MCFOA BOARD RECOMMENDS THAT FIRST-YEAR PARTICIPANTS HAVE COMPLETED AT LEAST 9-12 MONTH OF EMPLOYMENT IN A MUNICIPAL SETTING BEFORE ATTENDING THE INSTITUTE IN ORDER TO RECEIVE FULL UNDERSTANDING OF THE INFORMATION PROVIDED THROUGHOUT THE PROGRM.**

Why Attend?

The MMCI offers top-notch courses that are directly applicable to work in the field. Planned by a committee of accredited and experienced professionals, the program emphasizes professional development in the areas of public administration, social and interpersonal skills, and special topics central to emerging issues in the field. Specifically, Institute coursework focuses on the development of administrative knowledge, critical thinking skills, financial management, leadership abilities, social and interpersonal skills, and technical skills. Participants learn to view problems from multiple perspectives and to refine their problem solving techniques. Courses combine lecture, discussion, and hands-on training, and are taught by experts in the field with a focus on practical, how-to education. Utilizing accredited and experienced professionals allows the Institute to recognize the critical role of the municipal clerk in serving both large and small cities. No matter what size city, clerks are constantly learning how to adapt resources to meet greater demands. The Institute provides a valuable opportunity to help cities extend those resources. The MMCI provides an invaluable networking opportunity for discussion and idea sharing among clerks from throughout Minnesota (again, from municipalities of all sizes), thereby helping participants to build a network for problem solving that continues long after the formal sessions end. Building this resource network is an efficient and cost-effective way to help clerks with their professional growth. This training program strives to enhance the quality, professional competence and performance of municipal clerks in the state of Minnesota. The intent of training is to improve local governance and thus improve service to the local citizen. The Institute delivers the following outcomes: Participants will be well-versed in the theory and practice of their profession and learn how to keep abreast of new laws or changes affecting the profession. Participants will be able to apply what they have learned to their jobs. Participants will be able to gain insight into their profession through contact with instructors and through a network of experienced municipal clerks. Participants will be able to attain their CMC certification within three years if they have also obtained the IIMC required experience points and meet IIMC membership requirements. Graduates of the Institute can also apply for the designation of MCMC if they have also obtained the MCFOA required experience points and meet MCFOA membership requirements.

INSTITUTE MCFOA BOARD POLICY

ALL CURRICULUM HOURS ARE MANDATORY, AND REGISTRANTS WHO DO NOT COMPLETE THE REQUIRED CURRICULUM WILL NOT BE ALLOWED TO ADVANCE TO THE NEXT LEVEL TOWARDS

GRADUATION. There is a strict adherence to punctuality in each session and no cell phone calls or texting are allowed in the classroom (devices are allowed for session materials only). Attendance will be tracked. In rare instances related to emergencies, excused absences are allowed if approved by the Institute Director. These excused absences will require a “makeup assignment” that is provided by the Institute Director (who will collaborate with the instructor prior to the end of the programming). PARTICIPANTS WHO FAIL TO COMPLY WITH ATTENDANCE AND PUNCTUALITY REQUIREMENTS WILL NOT RECEIVE A CERTIFICATE OF COMPLETION.

Those who apply for a MMCI Grant will receive an email after the MCFOA March Board Meeting with a code to be used at registration.

Contact Us:

Betsy Snyder - is our administrative assistant and can be reached at adminasst@mcfoa.org

Click here to Purchase MCFOA Accessories and Apparel

Region 1 Training
04/23/2026 9:00 AM | Park Rapids City Hall

Minnesota Municipal Clerks Institute (MMCI)
05/04/2026 8:00 AM | Heritage Center, Brooklyn Center

Athenian Dialogue - "The Frozen River"
07/17/2026 9:00 AM | Detroit Lakes City Hall Community Room

SMITH & WARREN®

A Century of Serving Those Who Serve.

Your Custom Product

Displayed size and color is approximate. Actual badge may vary

Actual Size: 2.375"W x 2.875"H

Product Overview

S158B

FINISH: GOL-RAY
LINE 1: CHIEF
LINE 2: LANESBORO
LINE 3: FIRE
LINE 4: EST. 1884
FONT TYPE: BLOCK
ENAMEL TYPE: HARD
TEXT SEPARATOR: NONE
LETTER COLOR: BLACK
SEAL: C193FRE
ATTACHMENT: PIN & SAFETY CATCH
SHAPE: FLAT
OPTIONS: SHELLBACK
ACCESSORY:
NOTES:

PRODUCT	QTY	UNIT PRICE
Badges: **S158B**	1	$154.50
Total Cost		$154.50

Dealer Fulfill

Ref: **124836** Pin:**8748** Dealer Link: https://www.visualbadge.com/DealerVB.aspx?quote_num=124836&pin=8748

Created With:

Privacy - Terms

SMITH & WARREN®

A Century of Serving Those Who Serve.

Your Custom Product

Displayed size and color is approximate. Actual badge may vary

Actual Size: 2.375"W x 2.875"H

Product Overview

S158B

FINISH: GOL-RAY
LINE 1: 1ST ASST. CHIEF
LINE 2: LANESBORO
LINE 3: FIRE
LINE 4: EST. 1884
FONT TYPE: BLOCK
ENAMEL TYPE: HARD
TEXT SEPARATOR: NONE
LETTER COLOR: BLACK
SEAL: C193FRE
ATTACHMENT: PIN & SAFETY CATCH
SHAPE: FLAT
OPTIONS: SHELLBACK
ACCESSORY:
NOTES:

PRODUCT	QTY	UNIT PRICE
Badges: **S158B**	1	$154.50
Total Cost		$154.50

Dealer Fulfill

Ref: **124838** Pin:**4065** Dealer Link: https://www.visualbadge.com/DealerVB.aspx?quote_num=124838&pin=4065

Created With:

Privacy - Terms

SMITH & WARREN®

A Century of Serving Those Who Serve.

Your Custom Product

Displayed size and color is approximate. Actual badge may vary

Actual Size: 2.375"W x 2.875"H

Product Overview

S158B

FINISH: GOL-RAY
LINE 1: 2ND ASST. CHIEF
LINE 2: LANESBORO
LINE 3: FIRE
LINE 4: EST. 1884
FONT TYPE: BLOCK
ENAMEL TYPE: HARD
TEXT SEPARATOR: NONE
LETTER COLOR: BLACK
SEAL: C193FRE
ATTACHMENT: PIN & SAFETY CATCH
SHAPE: FLAT
OPTIONS: SHELLBACK
ACCESSORY:
NOTES:

PRODUCT	QTY	UNIT PRICE
Badges: **S158B**	1	$154.50
Total Cost		$154.50

Dealer Fulfill

Ref: **124839** Pin:**5944** Dealer Link: https://www.visualbadge.com/DealerVB.aspx?quote_num=124839&pin=5944

Created With:

Privacy - Terms

SMITH & WARREN®

A Century of Serving Those Who Serve.

Your Custom Product

Displayed size and color is approximate. Actual badge may vary

Actual Size: 2.375"W x 2.875"H

Product Overview

S158B

FINISH: GOL-RAY
LINE 1: 3RD ASST. CHIEF
LINE 2: LANESBORO
LINE 3: FIRE
LINE 4: EST. 1884
FONT TYPE: BLOCK
ENAMEL TYPE: HARD
TEXT SEPARATOR: NONE
LETTER COLOR: BLACK
SEAL: C193FRE
ATTACHMENT: PIN & SAFETY CATCH
SHAPE: FLAT
OPTIONS: SHELLBACK
ACCESSORY:
NOTES:

PRODUCT	QTY	UNIT PRICE
Badges: **S158B**	1	$154.50
Total Cost		$154.50

Dealer Fulfill

Ref: **124840** Pin:**8172** Dealer Link: https://www.visualbadge.com/DealerVB.aspx?quote_num=124840&pin=8172

Created With:

Privacy - Terms

SMITH & WARREN®

A Century of Serving Those Who Serve.

Your Custom Product

Displayed size and color is approximate. Actual badge may vary

Actual Size: 2.375"W x 2.875"H

Product Overview

S158B

FINISH: SIL-RAY
LINE 1: MEMBER
LINE 2: LANESBORO
LINE 3: FIRE
LINE 4: EST. 1884
FONT TYPE: BLOCK
ENAMEL TYPE: HARD
TEXT SEPARATOR: NONE
LETTER COLOR: BLACK
SEAL: C193FRE
ATTACHMENT: PIN & SAFETY CATCH
SHAPE: FLAT
OPTIONS: SHELLBACK
ACCESSORY:
NOTES:

PRODUCT	QTY	UNIT PRICE
Badges: **S158B**	1	$154.50
Total Cost		$154.50

Dealer Fulfill

Ref: **124841** Pin:**6331** Dealer Link: https://www.visualbadge.com/DealerVB.aspx?quote_num=124841&pin=6331

Created With:

Privacy - Terms

202 Parkway Avenue South | P.O. Box 333
Lanesboro, MN 55949
P:507-467-3722 | E: city@lanesboro-mn.gov
www.lanesboro-mn.gov

Lanesboro Fire Department
Uniform and Apparel Policy

Purpose
The purpose of this policy is to establish standards for the issuance, use, care, and replacement of Fire Department uniform apparel. The policy ensures consistent identification of department members, promotes professionalism, and protects the City's interests.

Eligibility
Uniform components shall be issued to Fire Department members under the following conditions:

A. Probationary/Trainee Members
   Members in trainee status shall be eligible to receive designated uniform items upon:
   - Completion of six (6) months of service in good standing, as determined by the Fire Chief.

B. Certified Firefighters
   Members shall receive full standard uniform issuance upon:
   - Successful completion of Firefighter I and Firefighter II training; and
   - Passage of applicable certification assessments.

Standard Uniform Issuance
The Fire Chief shall establish and maintain a list of standard-issued uniform items. These items may include, but are not limited to:
- Department-issued t-shirts
- Dress shirts
- Badges
- Turnout gear
- Other identifying apparel or insignia

The Fire Chief may differentiate issued items based on rank, certification level, or role within the department.

Use and Representation
All issued uniform apparel is considered official City property (unless otherwise designated) and shall be worn in a manner that reflects positively on the City and Fire Department.

Members are expected to:
- Conduct themselves professionally when wearing department apparel
- Avoid wearing department apparel in situations that could bring discredit to the City or Fire Department
- Not imply official authority when not acting in an official capacity

Care and Responsibility
Members are responsible for the proper care and maintenance of issued uniform items.
- Lost, stolen, or damaged items due to negligence shall be replaced at the member's expense, as determined by the Fire Chief.
- Normal wear and tear shall not be considered negligence.

DRAFT

Replacement Schedule
To maintain a professional appearance, uniform items may be replaced according to the following general schedule:

- T-shirts: Eligible for replacement no more than once per calendar year
- Dress shirts: Eligible for replacement no more than once every five (5) years

The Fire Chief may authorize earlier replacement due to excessive wear, damage incurred in the line of duty, or other justified circumstances.

Return of Uniform Items
Upon separation from the Fire Department (including resignation, termination, or retirement), members shall return all issued uniform items, including but not limited to:

- Badge (mandatory return)
- Name tags
- Any outerwear or specialty-issued apparel

Failure to return required items may result in:

- Billing to the member for replacement cost, and/or
- Withholding of final compensation where legally permissible

Misuse and Misrepresentation
Improper use of Fire Department uniform apparel is strictly prohibited. This includes:

- Wearing the uniform to falsely represent oneself as acting in an official capacity
- Use of uniform apparel in political activities, unlawful conduct, or personal gain
- Any conduct that brings discredit to the City or department

Violations of this section may result in disciplinary action, including:

- Suspension
- Revocation of uniform privileges
- Termination from the Fire Department

Administration
The Fire Chief shall be responsible for:

- Implementing and enforcing this policy
- Maintaining inventory records of issued items
- Determining eligibility, replacement, and cost responsibility
- Approving exceptions where appropriate

Effective Date
This policy shall take effect upon adoption by the City Council.

Madam Mayor and Council Members,

The Lanesboro Firemen's Relief Association Board respectfully submits this request for Council approval to increase the annual retirement benefit amount from $1,850 to $1,950 per year of service.

Our most recent financial and actuarial review shows that implementing this increase will still leave an estimated surplus of $23,792 in the Special Fund. This surplus provides a healthy buffer to account for expected fluctuations in investment performance and ensures that the fund remains financially sound.

Based on these findings, the Board has determined that the proposed benefit level is both reasonable and sustainable, while continuing to support the long-term stability of the Relief Association Special Fund.

Attached for your review are the minutes from our recent meeting at which this increase was approved, the detailed report supporting this adjustment, and the most recent Minnesota State Auditor's Office Investment Report Card.

We appreciate your consideration of this request and are available to answer any questions or provide additional information.

Thank you for your ongoing support of the Lanesboro Fire Department and its members.

Respectfully,
Chase Bakke
President, Lanesboro Firemen's Relief Association
On behalf of the Board of Trustees

Lanesboro Firemen's Relief Association
Regular Meeting Minutes
March 9, 2026

The meeting was called to order by President Chase Bakke.

Roll Call of Relief Association Board of Trustees
Present: Rob Wagner, Chase Bakke, Jeff Norby, John Prinzing, Blaine Harmon, Colin Bakke, and Matt Schnebly
Not Present: Mitchell Walbridge and Kathy Wade

Relief Association Board of Trustees Discussion
Retirement Benefit Increase
A proposal was discussed to increase the retirement benefit to 1,950 dollars per year of service. Blaine reviewed the Report Card and the Benefit Level Projection report.
A motion was made by John Prinzing to increase the retirement benefit level to 1,950 dollars and to send a formal request to the City Council for final approval. The motion was seconded by Colin Bakke. Motion carried – all in favor.

Approval of Minutes
A motion to approve the previous meeting's minutes was made by John Dollar and seconded by Bryan Benson. The motion carried – all in favor.

General Fund Treasurer's Report
John Prinzing gave a report on the monthly transactions and account totals.
The following bill was presented:
• Jeff Norby – Meeting food: 50.78 dollars
A motion to pay the submitted bill was made by Jim Iverson and seconded by Bryan Benson. The motion carried – all in favor.

Special Fund (Retirement) Treasurer's Report
Blaine Harmon - the Special Fund account balance was reported as 587,101.36 dollars.

Gambling Report
Gambling Manager Rob Wagner reviewed the gambling report.
A motion to pay the gambling bills was made by Tony Semmen and seconded by Bryan Benson. Motion carried – all in favor.

Old Business
Donation to Ambassadors of Music – Europe Trip
President Chase Bakke provided an update on the donation request and shared an informational page from the Gambling Control Board outlining acceptable ways to donate or spend gambling funds. No action was taken.

Calendar Donations – City Council Request
President Chase Bakke and Secretary/General Fund Treasurer John Prinzing are gathering the necessary information for the upcoming request to the City Council, expected for the April meeting. No action taken.

New Business
Street Closure for Buffalo Bill Days
Discussion whether any layout changes were needed before beginning the street closure process. The consensus was to keep the layout the same as last year.
A question was raised regarding access to the dance from the business at the former Old Village Hall location, operated by Luis. No action was taken, as the business has not yet opened.

Hardship or Donation Requests
None.

Adjournment
A motion to adjourn the meeting was made by Rob Wagner and seconded by Anthony Schwartz. The motion carried.

This page is being provided as an optional tool that a relief association may use as a resource to estimate the impact that benefit level changes or investment rate of return changes could have on the relief association's funded status. This page is not required to be completed; the Schedule Form can be submitted without completing this page.

If you choose to complete this page, please be aware that the calculated information, including the surplus or deficit and required contribution amounts, are rough estimates, only. This tool should not be relied upon in lieu of individualized services provided by a relief association's auditor, actuary, or financial advisor.

The instructions on how to use this page are found on the Home tab of this spreadsheet. If a deferred member receives deferred interest, the member's individual balance is assumed to increase by 5% each year. The fire state aid amount is assumed to increase by 3.5% each year.
The supplemental state aid amount is assumed to be the same amount each year.
Projected administrative expenses (in Line 22) is assumed to increase by 3.5% each year.

Form SC-25

OFFICE OF THE STATE AUDITOR

Benefit Level Projections

	2025 Benefit Increase Projections		2026 Benefit Increase Projections		2027 Benefit Increase Projections	
2025 Benefit Level:	1A.	$ 1,850				
2025 Rate of Return:	2A.	5.00%				
2026 Benefit Level:			1B.	$ 1,950		
2026 Rate of Return:			2B.	5.00%		
2027 Benefit Level:					1C.	$ 2,050
2027 Rate of Return:					2C.	5.00%

Projection of Liabilities for Year End

	2025	2026	2026	2027	2027	2028
Total Active Member Liabilities	416,607	455,488	480,109	522,967	549,788	596,896
Total Deferred Member Liabilities	139,823	139,823	139,823	139,823	139,823	139,823
Total Unpaid Installments	0	0	0	0	0	0
Less: Projected Payouts	5,270	7,120	7,220	9,170	9,370	11,420
Grand Total Special Fund Liability	3A. 551,160	4A. 588,191	3B. 612,712	4B. 653,620	3C. 680,241	4C. 725,299
Normal Cost (Line 4 minus Line 3)		5A. 37,031		5B. 40,908		5C. 45,058

Projection of Net Assets for Year End

Special Fund Assets on January 1 (Prior Year FIRE Form Ending Net Assets)		6A. 532,179		6B. 580,432		6C. 636,504
Projected Income						
Fire State Aid (fire state aid of $20,374 may be increased by up to 3.5%)		7A. 20,374		7B. 21,087		7C. 21,825
Supplemental State Aid (actual supplemental state aid)		8A. 3,213		8B. 3,213		8C. 3,213
Municipal / Independent Fire Dept. Contributions		9A. 3,500		9B. 3,500		9C. 3,500
Investment Earnings (Line 2 multiplied by Line 6)		10A. 26,609		10B. 29,022		10C. 31,825
Member Dues		11A. 0		11B. 0		11C. 0
Other Revenues		12A. 527		12B. 0		12C. 0
Total Projected Income		13A. 54,223		13B. 56,822		13C. 60,363
Projected Expenses						
Total Service Pensions and Benefit Payments	Total Number of Benefits Paid 1	14A. 5,270	0	14B. 0	0	14C. 0
Administrative Expenses		15A. 700		15B. 750		15C. 800
Total Projected Expenses		16A. 5,970		16B. 750		16C. 800
Projected Net Assets at Year End		17A. 580,432		17B. 636,504		17C. 696,067

Projection of Surplus or (Deficit) as of Year End

Projected Assets (Line 17)		18A. 580,432		18B. 636,504		18C. 696,067
Accrued Liability Less Projection Payouts		19A. 551,160		19B. 612,712		19C. 680,241
Surplus or (Deficit) (Line 18 minus Line 19)		20A. 29,272		20B. 23,792		20C. 15,826

Deficit Information - Original			2025 Deficit Information - Adjusted			2026 Deficit Information - Adjusted			2027 Deficit Information - Adjusted		
Year Incurred	Original Amount	Amount Retired as of 12/31/2024	Original Amount	Amount Retired as of 12/31/2025	Amount Left to Retire 1/1/2026	Original Amount	Amount Retired as of 12/31/2026	Amount Left to Retire 1/1/2027	Original Amount	Amount Retired as of 12/31/2027	Amount Left to Retire 1/1/2028
2016	0	0									
2017	0	0									
2018	0	0									
2019	0	0									
2020	0	0									
2021	0	0									
2022	0	0									
2023	0	0									
2024	0	0									
2025											
2026											
2027											
Totals	0	0	0	0	0	0	0	0	0	0	0

Normal Cost		21A. 37,031			21B. 40,908			21C. 45,058
Projected Administrative Expense Enter Prior Year Admin Exp here:	22A. 664	687	22B. 687	711	22C. 711	736
Amortization of Deficit (Total of Original Amount column x 0.10)		23A. 0		23B. 0		23C. 0
10% of Surplus		24A. 2,927		24B. 2,379		24C. 1,583
Fire and Supplemental State Aid		25A. 23,587		25B. 24,300		25C. 25,038
Member Dues		26A. 0		26B. 0		26C. 0
5% of Projected Assets at Year End		27A. 29,022		27B. 31,825		27C. 34,803
Required Contribution (Add Lines 21, 22 and 23, subtract Lines 24, 25, 26 and 27. If negative, zero is displayed.)		28A. 0		28B. 0		28C. 0

Lanesboro Fire Relief Association
Investment Report Card

For the Year Ended December 31, 2024

Rates of Return

	Relief Association	SBI Balanced Fund	PERA Statewide Volunteer Plan[2]
One-Year	8.9%	14.8%	10.4%
Three-Year	2.8%	4.3%	2.4%
Five-Year	5.3%	8.9%	6.2%
Ten-Year	4.8%	8.5%	6.4%
Fifteen-Year	4.2%	9.5%	N/A
Twenty-Year	3.6%	7.8%	N/A

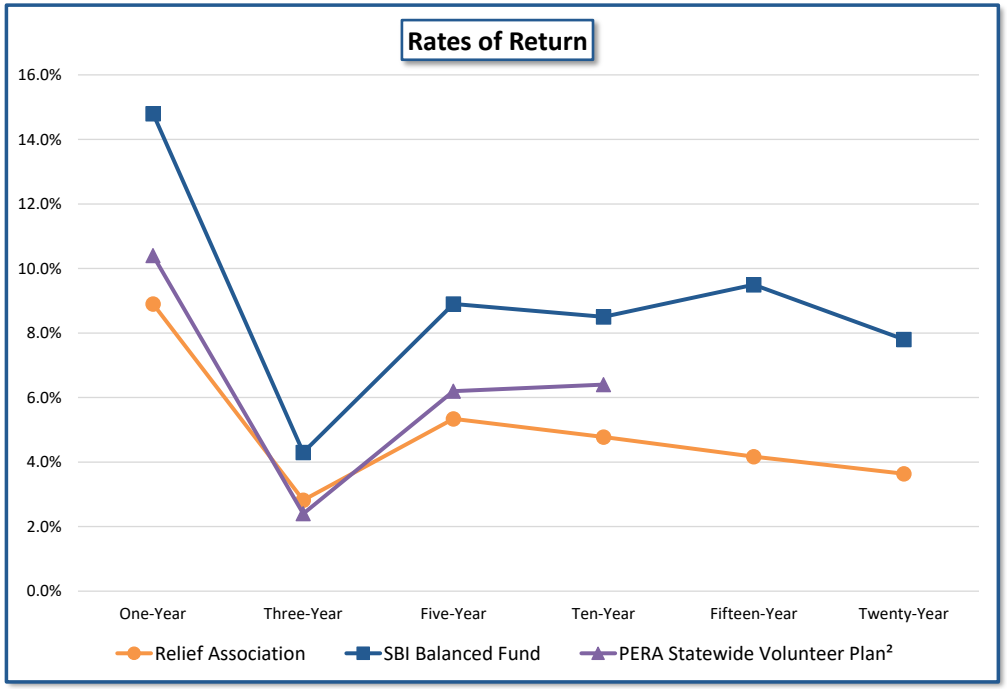

Relief Association Asset Allocations

	As of 1/1/2024	As of 12/31/2024
Domestic Stock	46.5%	49.8%
International Stock	3.7%	3.7%
Bonds	17.1%	16.6%
Cash	32.6%	30.0%
Other	0.1%	0.0%

Benchmark Information

Custom Benchmark (One-Year)[1]	13.9%

State Board of Investment Returns	2024	Ten-Year
SBI Balanced Fund	14.8%	8.5%
SBI Bond Fund	1.9%	1.9%
SBI Broad International Equity Fund	7.8%	5.7%
SBI Money Market Fund	5.5%	2.0%
SBI U.S. Equity Actively Managed Fund	24.3%	12.9%
SBI U.S. Equity Index Fund	23.9%	12.7%

Index Returns	2024	Ten-Year
Russell 3000 (Domestic Stock)	23.8%	12.6%
MSCI ACWI ex. U.S. Net (International Stock)[3]	5.5%	4.8%
Bloomberg U.S. Aggregate (Bonds)	1.3%	1.4%
ICE BofA U.S. 3-Month Treasury Bill (Cash)	5.3%	1.8%
Russell 3000 (Other)	23.8%	12.6%
S&P 500	25.0%	13.1%
NASDAQ Composite TR	30.4%	16.6%
Dow Jones Industrial Average	17.2%	11.8%

[1]The Custom Benchmark (One-Year) is calculated based on the relief association December 31, 2024 asset allocations.
The benchmark may not fully reflect the different investment exposures or diversity of investments held within certain asset classes for some relief associations.
[2]The PERA Statewide Volunteer Plan incorporated in 2010.
[3]MSCI ACWI ex US Net of Taxes on Dividends

This Investment Report Card is provided for informational purposes and should not be construed as containing investment or legal advice, and its contents are subject to revision.

STATE OF MINNESOTA

Office of the State Auditor

Julie Blaha
State Auditor

Suite 500
525 Park Street
Saint Paul, MN 55103

Volunteer Fire Relief Association
Investment Report Card

The Office of the State Auditor is providing the attached "Investment Report Card" as an educational tool. The report card provides one-year and multi-year rates of return calculated for your relief association, as well as a custom benchmark rate of return. The custom benchmark rate of return can be used to measure a relief association's actual investment performance for 2024 against market returns. This cover document provides information to help you understand the attached individualized report card. It does not contain investment or legal advice and should not be relied upon in lieu of investment or legal advice.

Rates of Return

The one-year rate of return is the return calculated based on a relief association's Special Fund investments for calendar year 2024. The three-year, five-year, ten-year, fifteen-year, and twenty-year rates of return are also provided, which show the average annual returns for the respective periods. The graph compares the relief association's one-year and multi-year rates of return to returns for the State Board of Investment's Balanced Fund and the Statewide Volunteer Firefighter Retirement Plan (SVF Plan), administered by the Public Employees Retirement Association (PERA).

Asset Allocations

The beginning of year and end of year asset allocations show the percentage of a relief association's portfolio that was invested in various asset classes. By diversifying an asset base, the goal is to create a favorable risk/reward ratio for the portfolio. When returns for one asset class decline, the expectation is that returns for another asset class will increase, offsetting the loss. The "other" asset class includes all investments besides cash, stocks, and bonds, including small allocations to this class within mutual funds.

Benchmark Information

Custom Benchmark: The custom benchmark rate of return is the standard against which the performance of a relief association's investments can be measured. Measuring investment returns against an appropriate benchmark encourages prudent investment decisions, and gives trustees another method of evaluating investment performance. An ideal benchmark return would consist of a hypothetical portfolio of indices, invested in the same asset classes and in the same proportion as the actual holdings of the entire portfolio. Indices track different asset classes, such as domestic equity or bonds. An index may also track subsets of an asset class, such as small-capitalization growth domestic equity. Although benchmark indices are not directly available for investment purposes, mutual and collective index funds which hold the same securities as the index can be obtained. Known as "index funds," these funds are managed with a passive style.

The benchmark return is calculated by multiplying the relief association's year-end asset class proportions by the rate of return earned on a common benchmark index for each asset class. If a relief association changed investment strategies during the year, the calculated benchmark return would not reflect the changes.

Benchmark Calculation Example:

December 31, 2024 Asset Allocation		Benchmark	Return	(a) x (b)
	(a)		(b)	(c)
Domestic Stock	20.9%	Russell 3000	23.8%	5.0%
International Stock	10.7%	MSCI ACWI ex. U.S. Net	5.5%	0.6%
Bonds	7.5%	Bloomberg U.S. Aggregate	1.3%	0.1%
Cash	40.0%	ICE BofA U.S. 3-Month TR Bill	5.3%	2.1%
Other	20.9%	Russell 3000	23.8%	5.0%
Benchmark Return			Sum (c) =	**12.8%**

2024 Index Returns: The benchmark indices used to calculate the relief association's custom benchmark rate of return are provided in the Benchmark Information section of the attached report card, along with the rate of return for each respective index.

- **Russell 3000 Index –** A performance measure of the overall U.S. stock market. This index includes the 3000 largest publicly traded U.S. companies.
- **MSCI ACWI ex. U.S. Net Index –** A performance measure of international stocks, including developed markets and emerging markets. This index does not include the U.S. stock market's performance and is net of taxes on dividends.
- **Bloomberg U.S. Aggregate Bond Index –** A performance measure of the U.S. investment grade bond market, including corporate and government bonds.
- **ICE Bank of America U.S. 3-Month Treasury Bill –** A performance measure of short-term cash investments.
- **S&P 500 –** A performance measure of the 500 largest U.S. publicly traded companies.
- **NASDAQ Composite –** A performance measure of over 3,300 common equities listed on the NASDAQ stock exchange.
- **Dow Jones Industrial Average –** A performance measure that tracks 30 large, publicly traded companies trading on the New York Stock Exchange and the NASDAQ.

2024 State Board of Investment Returns: Relief associations are authorized to invest assets in the State Board of Investment (SBI) Supplemental Investment Fund (SIF). There are six investment accounts, or investment options, within the Supplemental Investment Fund that are available for relief association investment. It is not the intent of the SBI to advise relief associations regarding their choice among investment accounts. Relief associations may wish to consult an investment advisor for guidance. The SBI Returns section of the attached report card provides the rates of return for the six SBI accounts. The SBI rates of return serve as an additional benchmark for a relief association, showing returns that were available during 2024. The six accounts are listed below.

- **Balanced Fund** – a balanced portfolio utilizing both common stocks and bonds
- **Bond Fund** – an actively managed, bond portfolio
- **Broad International Equity Fund** – a portfolio of non-U.S. stocks that incorporates both active and passive management
- **Money Market Fund** – a portfolio utilizing short-term, liquid debt securities
- **U.S. Equity Actively Managed Fund** – an actively managed, U.S. common stock portfolio
- **U.S. Equity Index Fund** – a passively managed, common stock portfolio

STATE OF MINNESOTA
OFFICE OF THE STATE AUDITOR

(651)296-2551 | State.Auditor@osa.state.mn.us | www.osa.state.mn.us

Statement of Position
Required Municipal Contributions to Fire Relief Associations

Date Reviewed: 12/26/2025
Date Revised: 12/26/2025

This Statement of Position is not legal advice and is subject to revision.

State law requires a municipality to pay a minimum annual contribution to the special fund of its affiliated defined-benefit fire relief association, unless the special fund is fully funded or state aid is sufficient to cover the municipal obligation.[1] The special fund is a fund established and maintained within a relief association to pay service pensions to retiring members. A pension plan is "fully funded" when there are sufficient assets to cover future liabilities.

The funded status of a special fund is affected primarily by changes to benefit levels (*i.e.*, liabilities increase) and by investment gains or losses (*i.e.*, assets increase or decrease). Benefit increases and investment losses decrease a fund's assets, which could increase the likelihood that a municipal contribution will be required.

Whether a municipal contribution is required and the contribution amount are determined by using a statutory formula. The formula varies depending on whether the plan pays lump-sum service pensions or pays monthly service pensions.[2]

Lump-Sum Pension Plans

For relief associations that solely pay lump-sum service pensions, the minimum required municipal contribution equals the financial requirements of the special fund minus the anticipated amount of state aid to be received during the following calendar year. In addition, five percent annual interest on the assets is subtracted.[3]

The minimum required municipal contribution is calculated by the officers of the relief association during the month of July for the following year.[4] To calculate the minimum required municipal contribution, the officers need to know the special fund's financial requirements for the following year.

---

[1] Minn. Stat. § 424A.092, subds. 3 and 4; Minn. Stat. § 424A.093, subd. 5. In some instances, a municipal contribution may be required even though the pension plan is fully funded.

[2] *See* Minn. Stat. § 424A.092, subd. 3 (for lump-sum pension plans) and Minn. Stat. § 424A.093, subd. 5 (for monthly pension plans). There is no required municipal contribution for a defined contribution plan.

[3] Minn. Stat. § 424A.092, subd. 3(d).

[4] The Schedule Form, provided by the Office of the State Auditor, calculates the amount of any required municipal contribution for the following year. For example, the 2025 Schedule Form will calculate the required municipal contribution amount to be paid during 2026.

In July, the officers calculate the financial requirements for the following year and the overall funding balance for the current calendar year.

If the special fund is not fully funded, the financial requirements for the following calendar year are determined by taking into account 1) the total accrued liability for all active and deferred members of the relief association, calculated for the following calendar year; 2) the increase in the total accrued liability for the following calendar year over the present calendar year; 3) the amount of anticipated future administrative expenses; and 4) one-tenth of the deficit resulting from either an increase in the service pension or an investment loss occurring over the last ten years.

If the special fund is fully funded, the financial requirements for the following calendar year are the total of 1) the increase in the total accrued liability for all members for the following calendar year over the present calendar year; and 2) the amount of anticipated future administrative expenses.

Monthly Pension Plans

For relief associations that offer or pay monthly service pensions, the financial requirements of the special fund are based on the most recent actuarial valuation. Each relief association must determine the minimum obligation of the municipality for the following calendar year "on or before August 1 of each year."[5] The "most recent actuarial valuation" included in the calculation is generally a valuation from January 1 of the same year or December 31 of the prior year.

For most plans, the Governmental Accounting Standards Board (GASB) requires an actuarial valuation every two years.[6] In addition, a new actuarial valuation or actuarial impact estimate is required whenever there is a benefit change. For additional information on how the financial requirements and municipal contribution are determined, see the Office of the State Auditor's Statement of Position titled "Municipal Contribution Calculations for Monthly Plans."

Defined Contribution Plans

For relief associations with defined contribution plans, investment gains and losses are allocated to the individual firefighters. Defined contribution plans by their nature are always fully funded. The municipality has no obligation to make contributions to offset losses if they occur, although the municipality can make a voluntary contribution to the special fund if it chooses.

Benefit Levels

The level of benefits paid by a relief association is usually set by agreement between the relief association and the municipality. To change the benefit level, a relief association's board of trustees should discuss the change during a board meeting and vote to adopt a bylaw amendment containing the new benefit level. The board of trustees should follow the relief association's bylaw amendment procedures and Open Meeting Law requirements. After the benefit level change has been approved by the relief association, the board of trustees should seek municipal approval of the amended bylaws containing the benefit level change. The city council or town board can choose to ratify the changes or choose not to ratify the changes. Once the amended bylaws containing the benefit level change are ratified by the municipality, however, the benefit level is guaranteed by the municipality. The

[5] Minn. Stat. § 424A.093, subd. 5(a).

[6] *See* Minn. Stat. § 424A.014, subd. 1 (financial statements required to be in compliance with generally accepted auditing standards); GASB Statement 25, para. 35 (biennial actuarial valuations required for financial reporting purposes).

municipality is responsible for ensuring the special fund has sufficient assets to cover approved benefit levels.

For those relief associations that are affiliated with an independent nonprofit firefighting corporation rather than a municipal fire department, benefit level changes must be approved by the board of the independent corporation. In addition, the independent nonprofit firefighting corporation is responsible for making any required contributions to the relief association.

In limited circumstances, a relief association has the authority to increase its benefit level without municipal ratification. However, if a municipal contribution is later required, the bylaw amendment establishing the benefit level increase that was adopted without municipal approval is no longer effective on July 31.[7] Any service pension payable after that date may be paid only in accordance with the bylaws as amended with municipal ratification.[8] Municipalities do not have authority to unilaterally change a relief association's benefit level. Municipalities cannot initiate a change in benefit levels, rescind benefit increases, or give contingent approval to benefit changes.

Payment of Required Municipal Contributions

To fulfill its obligation to provide at least the minimum required municipal contribution, a municipality may use any source of public revenue, including a tax levy. For monthly pension plans, for example, a municipality may levy taxes "without any limitation as to rate or amount and irrespective of any limitations imposed" by any other law or regulation.[9]

If the relief association's benefit level is approved by the affiliated municipality, the municipality is required to make any contributions that become due at that benefit level. Municipal contributions are to be paid during the year in which the contribution is required. If the municipality does not include the full amount of the minimum municipal contribution in its levy for any year, the officers of the relief association must certify that amount to the county auditor, who must spread a levy in the amount of the certified minimum municipal contribution on the taxable property of the municipality.[10]

[7] Minn. Stat. § 424A.02, subd. 10.
[8] Minn. Stat. §§ 424A.092, subd. 6; 424A.093, subd. 6.
[9] Minn. Stat. §§ 424A.093, subd. 5(e); 424A.092, subd. 4(c).
[10] Minn. Stat. §§ 424A.092, subd. 4(e); 424A.093, subd. 5(f).

Request for Reimbursement and Transfer of Calendar Fundraiser Donations to the Lanesboro Firemen's Relief Association Special Fund

During this year's annual calendar fundraiser, many donors unintentionally wrote their checks out to the Lanesboro Fire Department instead of the Lanesboro Firemen's Relief Association. When this occurs, state law requires the Relief Association to turn those checks over to the City Council.

A similar situation took place in 2025. At that time, the Council, based on the recommendation from Administrator Walbridge, reimbursed the Relief Association for our calendar start-up costs and transferred the funds into the Relief Association's Special Fund. After that, our Calendar Fundraiser Manager, Tony Semmen, worked with Administrator Walbridge to improve the clarity of our donor instructions. Although changes were made, they were not enough to prevent the issue this year, and we are taking additional steps for next year's fundraiser.

The Relief Association values our long standing partnership with the City and appreciates the cooperation we have always had. Our organization donates hundreds of thousands of dollars toward Fire Department equipment and truck replacement needs, and we want to continue working together in that same positive relationship. To support proper handling of this year's fundraiser results, we are respectfully requesting the Council's assistance.

For transparency, we have attached a packet of supporting documents. This includes three statements from the Minnesota Office of the State Auditor, which explain the legal authority allowing the City to transfer these funds into the Special Fund and outline how Relief Association funds and donations must be handled. We also included our financial report for the fundraiser, which shows a net loss of 1,129.25 dollars for the Relief Association, as well as a copy of the calendar letter.

Requested Action
On behalf of the Lanesboro Firemen's Relief Association, we ask that the City Council approve one of the following options:

1. Transfer the 6,011.27 dollars in fundraiser donations currently received by the City, along with any additional 2026 calendar fundraiser donations that may arrive, to the Relief Association's Special Fund as required under Minnesota law.

2. Reimburse the Relief Association for our 2026 calendar fundraiser start-up costs in the amount of 6,321.25 dollars, consistent with the Council's approach in 2025.

Either option will ensure the Relief Association is made whole while keeping all handling of funds compliant with state law.

Legal Authority
• Minn. Stat. 424A.05, subdivision 2 requires that all municipal contributions, including donations, grants, state aid, and municipal tax proceeds, be credited to the Relief Association's Special Fund, for which the Relief Association treasurer is custodian.
• The Office of the State Auditor's Deposit of Municipal Funds statement from October 2023

clarifies that these funds must be deposited into the Relief Association's Special Fund and may not be deposited into a city general fund.

We appreciate the City's continued partnership and support. Please let us know if the Council would like any additional information. We look forward to continuing our strong working relationship and supporting the Lanesboro Fire Department and the community we serve.

Thank you for your consideration.

Chase Bakke
President
Lanesboro Firemen's Relief Association

STATE OF MINNESOTA
OFFICE OF THE STATE AUDITOR

(651)296-2551 | State.Auditor@osa.state.mn.us | www.osa.state.mn.us

Statement of Position
Fire Relief Association Funds: Special and General Funds, and Charitable Gambling Funds

Date Reviewed: 12/26/2025
Date Revised: 12/26/2025

This Statement of Position is not legal advice and is subject to revision.

Fire relief association trustees are responsible for the association's finances. To help manage those finances, the Minnesota Legislature has given relief associations authority to maintain two types of funds: a special fund and a general fund. If it has a permit to conduct charitable gambling, a relief association may also maintain a charitable gambling fund.

Special Fund

Every relief association must establish and maintain a special fund.[1] The special fund of a relief association functions as a trust fund to be used primarily to pay benefits. All money the relief association receives from the city, town, or state (for example, fire state aid, municipal contributions, and supplemental benefit reimbursements) must be deposited into the relief association's special fund. The special fund also receives donations of money and property that have been designated for the special fund. Investment income derived from special fund assets should be deposited into the special fund.[2]

Special fund assets may be disbursed only for purposes expressly authorized under Minnesota law. The special fund may be used to pay benefits, such as service pensions, disability benefits and survivor benefits, and certain fees and other expenses specifically authorized by law.[3] All benefit payments must be paid in accordance with Minnesota Statutes and requirements contained in the relief association's articles of incorporation and bylaws.

Administrative expenses, that is, necessary, reasonable and direct expenses of maintaining, protecting and administering the special fund, may be paid out of the special fund as long as such payments are permitted by law, provided for in the bylaws, and approved by the board of trustees.[4] Authorized administrative expenses payable from the special fund include:

---

[1] Minn. Stat. § 424A.05, subd. 1. If a relief association has only one fund, that fund is the special fund of the relief association. Minn. Stat. § 424A.05, subd. 3b(b). A relief association that has joined the Statewide Plan administered by the Public Employees Retirement Association is no longer a public pension plan and will not have a special fund.

[2] Minn. Stat. § 424A.05, subd. 2.

[3] *See* Minn. Stat. § 424A.05.

[4] Minn. Stat. § 424A.05, subd. 3b(a).

- Office expenses (for example, rent, utilities, equipment, supplies, postage, periodical subscriptions, furniture, fixtures, and salaries of administrative personnel).
- Salaries of the officers of the relief association and their itemized expenses incurred as a result of fulfilling their responsibilities as administrators of the special fund; salaries of the board members, if the salary amounts are approved by the governing body of the entity that is responsible for paying any required contributions; and expenses incurred by officers and members as a result of attending training classes or educational seminars relating to the administration of the relief association.[5]
- Reimbursement to officers and members of the board of trustees for reasonable and necessary expenses actually paid and incurred in the performance of their duties as trustees; and premiums on fiduciary liability insurance and official bonds for the officers, trustees, and employees of the relief association.[6]
- Professional fees limited to payment of authorized audit and audit-related services, accounting and accounting-related services, and actuarial, medical, legal, and investment and performance evaluation expenses. Authorized legal fees are fees paid to an attorney or a law firm. Relief associations may also pay filing and application fees from the special fund to federal or other governmental entities.[7]

Benefits payable from the special fund are not subject to garnishment, judgment, execution or other legal process, except for divisions of marital property during a divorce proceeding, or court orders for child support and maintenance.[8] Fines, such as those imposed by the Gambling Control Board or the Internal Revenue Service, may not be paid out of the special fund.

Special Fund Loans

Relief association trustees occasionally consider taking out a loan from a third party to cover pension and benefit payments. Such loans cannot be repaid from the special fund because loan repayments are not authorized expenses. Relief association trustees should make sure that adequate liquid investments are maintained to pay benefits as they come due. State law specifically requires the relief association's chief administrative officer to determine the minimum liquidity requirement of the relief association and to retain appropriate documentation of that determination for three years from the date of the determination.[9]

Records

In addition to the record retention requirement for the documentation of the liquidity determination described above, the treasurer of the relief association is required to maintain documents showing each transaction involving the assets or revenues of the special fund. The legislature has determined that all records documenting special fund transactions are public records and they must be accessible to the public.[10] If the fund assets are invested with the State Board of Investment (SBI), it is the relief

---

[5] Minn. Stat. § 424A.05, subd. 3b(a) (2) and (3).
[6] Minn. Stat. § 424A.05, subd. 3b(a) (6) and (7).
[7] Minn. Stat. § 424A.05, subd. 3b(a) (4) and (5).
[8] Minn. Stat. § 424A.015, subd. 2.
[9] Minn. Stat. § 356A.06, subd. 8.
[10] These records "are public and must be open for inspection by any member of the relief association, any officer or employee of the state or the municipality, or any member of the public, at reasonable times and places." Minn. Stat. § 424A.05, subd. 2. See also the OSA's Statement of Position titled "Management of Records for Fire Relief Associations."

association's responsibility to maintain adequate records to account for funds certified to the SBI's Supplemental Investment Fund.[11]

General Fund

Any relief association may establish and maintain a general fund.[12] A general fund is not required but can be helpful in managing non-pension money.

The general fund may be funded by member dues and revenues raised by the community. Donations to the relief association not specifically designated for the special fund should be deposited into the general fund.[13]

Disbursements from the general fund can be made for any purpose authorized by the relief association's articles of incorporation or bylaws, unless prohibited by other applicable law.[14] The relief association's general fund is to be used to pay other relief association expenses, such as fund-raising expenses, meeting snacks, and jackets, shirts or hats. Funds from the general fund may also be donated to the city or town for fire department use, such as for the purchase of new equipment. For more information on how donations should be handled, see the Office of the State Auditor (OSA)'s Statement of Position titled "Fire Department and Fire Relief Association Fundraisers and Donations."

Records

It is the responsibility of the treasurer of the relief association to maintain adequate records to document any transaction involving the general fund. These records must be "open for inspection by any member of the relief association at reasonable times and places."[15] Although a 1997 advisory opinion indicates that general fund financial records are "not public data," audits, financial statements, and reports containing information obtained from the records of the general fund and submitted to the OSA are public.[16]

Charitable Gambling Fund

The Minnesota Gambling Control Board, and not the OSA, regulates lawful gambling in Minnesota.[17]

A relief association with a permit to conduct charitable gambling in Minnesota may maintain a charitable gambling fund. How gambling funds may be spent, however, is strictly controlled by state law. It is illegal, for example, for a governmental unit to use any gambling funds it receives for pension funds.[18]

Records requirements related to maintaining a charitable gambling fund can be found in the Lawful Gambling and Gambling Devices Act.[19] Relief associations should consult with legal counsel or the Minnesota Gambling Control Board concerning charitable gambling and charitable gambling records management.

---

[11] Minn. Stat. § 11A.17, subd. 5.
[12] Minn. Stat. § 424A.06, subd. 1.
[13] Minn. Stat. § 424A.06, subd. 2.
[14] *See* Minn. Stat. § 424A.06, subd. 3.
[15] Minn. Stat. § 424A.06, subd. 2.
[16] *See* Minn. Dept. of Admin., Advisory Ops. 97-037; Minn. Stat. § 424A.014, subds. 1(c), 2(d).
[17] Minn. Stat. § 349.151, subd. 4.
[18] Minn. Stat. § 349.12, subd 25(c) 3; Minn. Stat. § 471.6151.
[19] Minn. Stat., ch. 349.

STATE OF MINNESOTA
OFFICE OF THE STATE AUDITOR

(651)296-2551 | State.Auditor@osa.state.mn.us | www.osa.state.mn.us

Statement of Position
Fire Department and Fire Relief Association Fundraisers and Donations

Date Reviewed: 12/26/2025
Date Revised: 12/26/2025

This Statement of Position is not legal advice and is subject to revision.

Fire departments and fire relief associations are separate and distinct, with different rules regarding fundraising and the acceptance of donations. The intent of this Statement of Position is to help ensure that, during the course of fundraising, a fire department, with its more limited authority, is not mistaken for a relief association and that a relief association is not mistaken for a fire department.

A relief association is a governmental entity separate from the municipality. One way in which a relief association differs from a city or town fire department is that a relief association is required to maintain control of its own funds. It receives and manages public money to offer retirement benefits for those providing firefighting and emergency first response services. Because relief associations are required to maintain control of their own funds, they need to maintain their own financial accounts, separate from the city or town accounts.

Fundraisers and Soliciting Donations

If its bylaws permit, the relief association may solicit donations or conduct fundraisers. This is because relief associations are separate nonprofit entities. Cities and towns, however, generally do not have clear authority to hold such fundraisers, nor do departments within these entities, such as municipal fire departments. In advertisements and solicitations, the relief association should identify itself as the entity conducting the solicitation or fundraiser and state the specific intended purpose for which funds are being raised.

If the relief association wishes to solicit donations, the relief association should explain clearly whether the donations are for the relief association's benefit or for the municipality, designated for the fire department. Any advertisement or solicitation should state clearly whether a donation is for the relief association or for the municipality. Donation checks should not be made out to the fire department. Depending on which entity is the intended beneficiary, donation checks should be made out to the relief association or the municipality, with a designation for the fire department.

Proceeds from fundraising events to benefit the relief association should be held in the relief association's general fund.[1]

[1] See the Office of the State Auditor's Statement of Position titled "Fire Departments, Fire Relief Associations, and Checking Accounts."

Donations From Relief Association

If permitted by the relief association's bylaws, a relief association may donate general fund money or equipment purchased with general fund money to a city council or town board. If the city's or town's governing body decides to accept the donation, it must do so formally through a resolution passed by a two-thirds majority.[2] The resolution should identify all limitations on how the funds may be used, including whether the donation is limited to use for fire department expenditures. A relief association should not purchase or install fire department equipment without the governing body's approval.

It is important to understand that a municipal department does not have authority to accept donations on its own, even if the donation is intended for the department's use. The donation still must be made to and accepted by the municipality's governing body. Donations made for the benefit of a fire department are city or town funds or assets, which can only be expended as permitted by law.

After a piece of equipment is donated to a municipality, it becomes that municipality's property. The municipality will have to maintain the equipment and may need to insure the equipment and add it to the city's or town's asset list. Relief associations should work in advance with the city or town to make sure any donation is one the municipality wants to accept.

[2] For joint powers fire departments, the joint powers agreement may define the process for approving and accepting a donation from the relief association.

Deposit of Municipal Funds

Below are two compliance issues the OSA has seen related to municipal funds being deposited into the affiliated relief association's general fund, and suggestions on how to avoid them.

Reimbursements for Fire Department Expenses

Minnesota law is clear that all money a relief association receives from a city or town must be deposited into the relief association's special fund. A relief association cannot deposit money from a city or town into the relief association's general fund, even if the money was intended to reimburse the general fund for municipal fire department expenses paid by the relief association.

For example, some relief associations use their general fund to purchase equipment for the fire department or pay for firefighter training. If a relief association chooses to use its general fund to cover expenses that would otherwise be the city's or town's obligation, it must absorb those expenses as the city or town cannot reimburse the relief association's general fund. Alternatively, the city or town can pay the expenses directly, or the firefighters themselves could pay the expenses and be reimbursed by the city or town.

Deposit of Funds Intended for the Fire Department

All funds intended for use by a municipal fire department must be controlled by the city or town. Donations made to a municipal fire department are city or town funds, which can only be expended as permitted by law. To accept such a donation, a city council or town board must pass a resolution by a two-thirds majority. Funds intended for the fire department should not be deposited into a relief association's general fund.

See our Statements of Position for additional information on fire department funds and on fundraisers and donations.

Published last in the October 2023 Pension Newsletter

How can we help?

Tel (651) 296 - 2551
Fax (651) 296 - 4755
TRS (800) 627 - 3529

525 Park Street, Suite 500
St. Paul, Minnesota 55103

Quick Links

Avoiding Pitfalls
Weekly Updates
Statements of Position
Calendar - Deadlines
Contact OSA Staff

Stay Connected

Want to stay up-to-date? Subscribe to the State Auditor's Weekly Update!

Subscribe

©2025 Office of the Minnesota State Auditor | Accessibility | Privacy Policy

centerline by HOBART

Project _____

AIA # _____ SIS # _____

Item # _____ Quantity _____ C.S.I. Section 114000

CDL CHEMICAL SANITIZING

Door-Type Dish Machine

MODEL

❑ **CDL** Chemical sanitizing

STANDARD FEATURES

+ 51 racks per hour
+ .86 gallons of water per rack
+ Chemical sanitizing
+ Recirculating design
+ Top-mounted user interface with digital temperature display
+ 4-sided door
+ 1 standard cycle with optional extended cycle
+ 18" pillarless door opening
+ Snap-in, revolving upper and lower anti-clogging wash & rinse arm; low-profile, single-arm design
+ Removable, 2-part stainless steel scrap screen
+ Soft start
+ Automatic pumped drain
+ Automatic fill
+ Service diagnostics with error notifications
+ Delime notification and cycle
+ Chemical pumps standard
+ Electric tank heat
+ Door actuated start
+ Straight through or corner installation

OPTIONS & ACCESSORIES (Available at extra cost)

❑ Chemical sensing indicators (low chemical alert)
❑ Corner splash kit
❑ Water hammer arrestor kit
❑ Pumped drain air gap kit
❑ Peg rack
❑ Combination rack
❑ Flanged feet

SPECIFIER STATEMENT

Specified unit will be NSF rated, Centerline™ by Hobart chemical sanitizing door-type dishwasher. Features recirculating design, two selectable cycles, pumped drain, 18" door opening, .86 gallons per rack, LED temperature and operator display, service diagnostics, detergent, rinse aid and sanitizer pumps. Constructed of stainless steel, rated at 51 racks per hour. 120/60/1 standard voltage.

1 year parts and labor warranty.

CDL CHEMICAL SANITIZING

Approved by _____ Date _____ Approved by _____ Date _____

CDL CHEMICAL SANITIZING
Door-Type Dish Machine

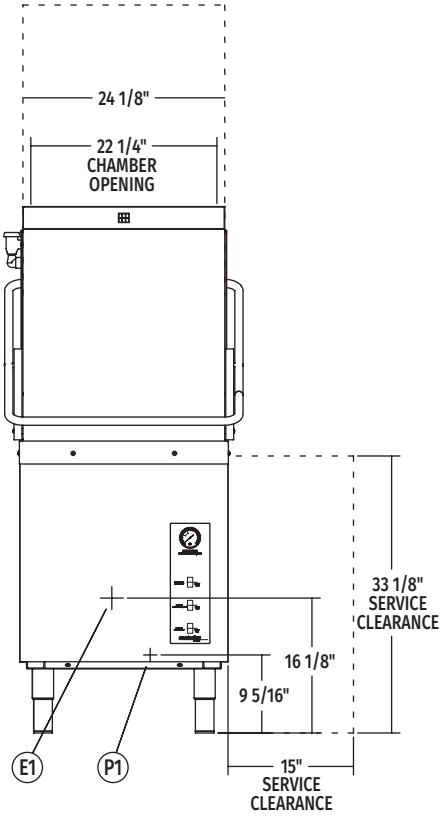

Front View

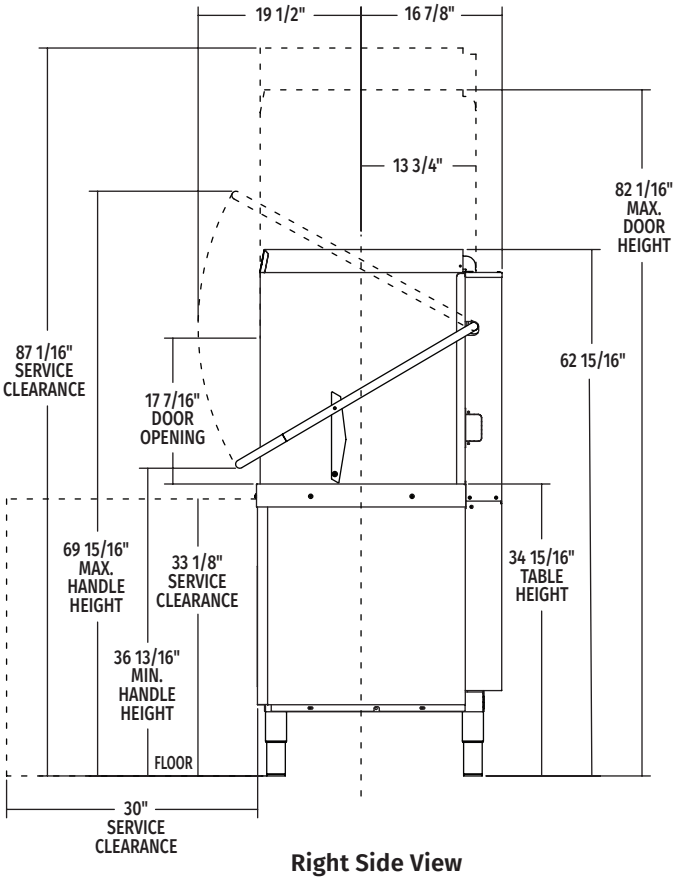

Right Side View

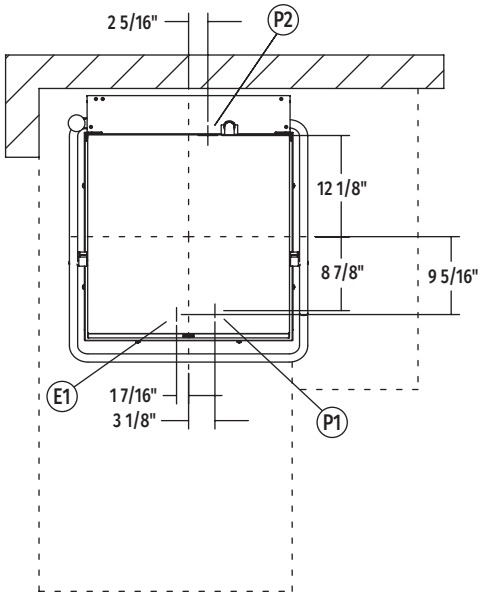

Top View

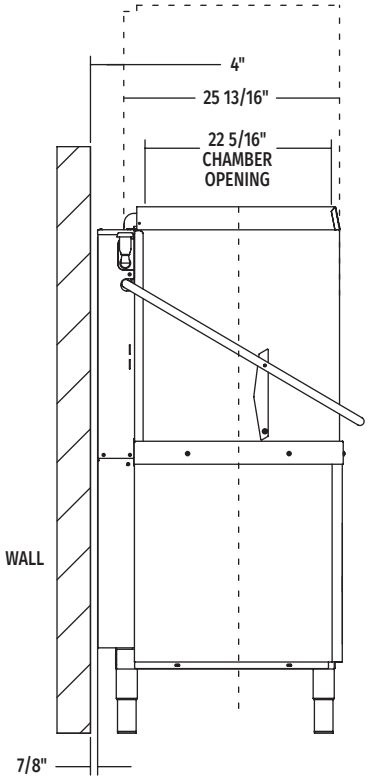

Left Side View

MODEL: CDL
00-563599
REV. C

LEGEND

Electrical Connections	
E1	Electrical connection: 1-1/8" dia. hole for 1" trade size conduit; 8-3/4" AFF.
Plumbing Connections	
P1	Single fill and rinse connection: 3/4" female garden hose fitting on 9' long hose supplied with machine; 120°F water minimum for CDL 140°F recommended.
P2	Drain connection: 19mm barb fitting with 9' long hose supplied with machine.
P3	Chemical supply: Detergent, sanitizer and rinse aid; approximately 8-3/4" AFF. 9' long tubing supplied with machine.

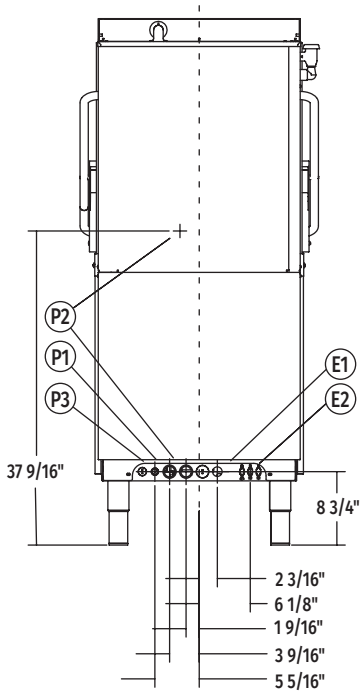

Back View

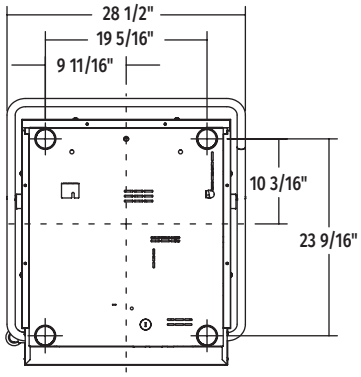

Bottom View

SPECIFICATIONS

Capacities

Racks per Hour (maximum) 51
Dishes per Hour (average 25 per rack) 1,275
Glasses per Hour (average 45 per rack) 2,295
Wash Tank (U.S. gallons) 4

Motor Horsepower

Wash Pump 0.52
Drain Pump 0.04

Rinse

Gallons per Rack 0.86
Gallons per Hour (maximum consumption) 43.9

Peak Rate of Drain Flow

Gallons per Minute (initial rate with full tank) 3.5

Heating

Electric Heating Unit (kW) 2

Shipping Weight (approximate). . . . . 214 lbs.

Crated Dimensions . . . . . .90.0"W x 30.0"L x 33.0"H

CDL Single Point Electrical Service Connection as Shown Below			
Elec. Specs	Rated Amps	Minimum Supply Circuit Ampacity	Maximum Protective Device
120/60/1	17.1	20	20

Approximate Heat Gain to Space without Vent Hood	
Type	BTU/Hr.
Latent	2,300
Sensible	1,000

WARNING: Electrical and grounding connections must comply with the applicable portion of the National Electrical Code and/or other local electrical codes.

Plumbing connections must comply with applicable sanitary, safety, and plumbing codes.

Plumbing Notes:

1. Water hammer arrestor (meeting ASSE-1010 standard or equivalent) to be supplied (by others) in common water supply line at service connection.
2. Recommended water hardness to be 3 grains or less for best results.
3. Recommended building flowing water pressure to the dishwasher is 20-25 PSI. If pressures higher than 25 PSI are present, a pressure regulating valve with internal thermal expansion bypass must be supplied (by others) in the water line to the dishwasher.
4. For convenience when cleaning, water tap should be installed near machine with heavy duty hose and squeeze valve.

Miscellaneous Notes:

1. All vertical dimensions taken from floor line may increase or decrease 1-1/4" depending on leg adjustment.
2. Vent hood (if required) to provide a minimum of 450 CFM exhaust (ref installation instructions).
3. Net weight of machine: 199 lbs.
   Domestic shipping weight: 214 lbs.
4. Size of racks – 19¾" x 19¾".

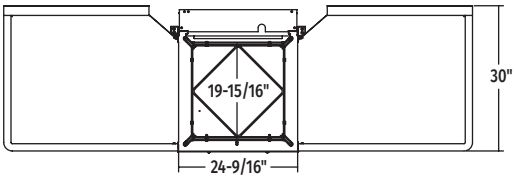

PASS THRU INSTALLATION

TOP INSIDE VIEW OF MACHINE

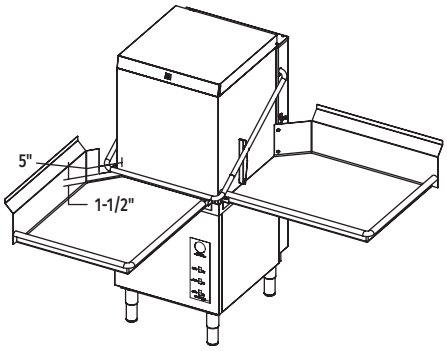

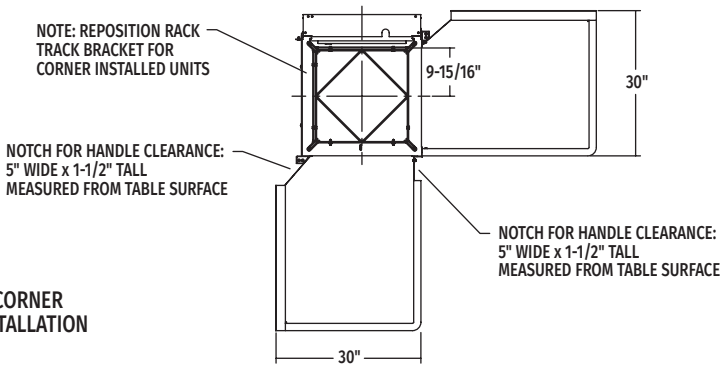

CORNER INSTALLATION

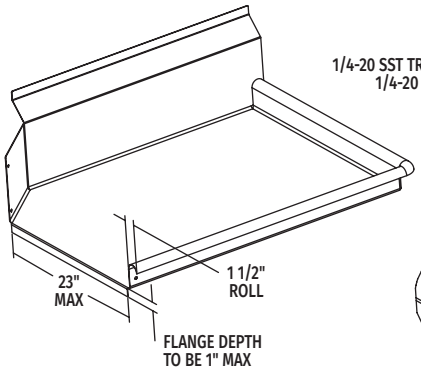

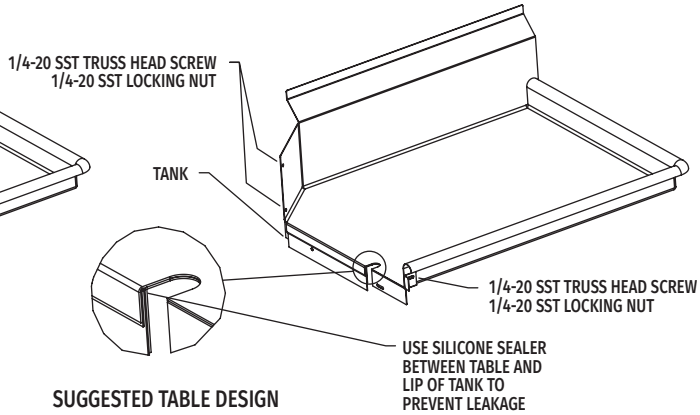

SUGGESTED TABLE DESIGN

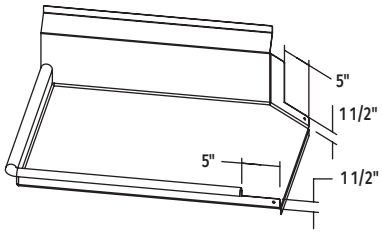

CORNER TABLE CUTOUTS

As continued product improvement is a policy of Hobart, specifications are subject to change without notice.

CAD and/or Revit Files Available

Cities of Chatfield/Lanesboro/Stewartville Minnesota Purchase and Sharing of a DuraPatcher Agreement

This agreement ("Agreement") is made and entered into this _____ day of _____, 2025, by and between the City of Stewartville, Minnesota ("City A"), and the City of Chatfield, Minnesota, ("City B"), and the City of Lanesboro, Minnesota ("City C"). City A and City B and City C are referred to herein individually as a "Party" and collectively as the "Parties."

WHEREAS, the Parties need certain public works maintenance equipment that is used only occasionally and for a limited period of time each year; and

WHEREAS, the Parties need to better provide for street repairs within the respective jurisdictions; and

WHEREAS, the Parties desire to be more efficient with their use and ownership of equipment; and

WHEREAS, the Parties agree that sharing equipment promotes the cost-effective and efficient use of public resources; and

WHEREAS, the Parties have agreed to jointly fund the purchase of a DuraPatcher; and

WHEREAS, the Parties desire to enter into an agreement to jointly purchase a DuraPatcher, when again needed, and establish procedures for sharing the equipment, and define their legal relationship and responsibilities; and

WHEREAS, the Parties are authorized to jointly and cooperatively exercise their powers pursuant to the provisions of Minnesota Statutes, Section 471.59.

NOW, THEREFORE, in consideration of the mutual promises contained herein, it is mutually agreed between the Parties as follows:

I. **Equipment.** The Parties agree to jointly purchase a DuraPatcher, when again agreed upon from an agreed upon Seller ("Seller'):

II. **Cost of Equipment.** The total cost of the DuraPatcher including any taxes and delivery is $_____ when again determined. Each Party shall pay the Seller one-third of the cost. The Parties agree to comply with all applicable public contracting laws.

III. Term. This Agreement will be in force for a period of 5 (five) years from its Effective Date. This Agreement will automatically renew for subsequent one-year terms unless either Parties provides the other Parties written notice to withdrawal as per Article XI. On or before the expiration of this Agreement the Parties will determine whether to retain or dispose of the Durapatcher. The Parties agree to work in good faith to reach agreement on an equitable division of the Durapatcher in accordance with the disposition provisions set forth in Article XII. If all three Parties want to retain the Durapatcher, the Parties shall determine who will retain the Durapatcher by random drawing.

IV. Cooperative Use of Equipment. The Parties, through their Public Works Directors, or designees, shall establish a reasonable schedule for the use of the DuraPatcher. Neither Parties shall lease, rent, loan, or otherwise permit the DuraPatcher to be used by anyone who is not a party to this Agreement without the written consent of the other Parties.

V. Repairs and Maintenance.

A. Non-Party Repairs and Maintenance. All costs paid to non-parties to repair and maintain the DuraPatcher shall be borne equally by all Parties. Each Party shall pay one-half of the cost to such vendor or reimburse the other Party if all the cost is paid by one Party. Any repair and maintenance costs in excess of $1,000 must first be approved by all Parties.

B. Routine Maintenance by Party. Each Party, at its own expense, shall perform routine maintenance on the DuraPatcher while the DuraPatcher is in its possession. Routine maintenance shall include broom replacement, oil changes, lubrication, replenishing fluids, washing and tire repairs.

C. Non-Routine Maintenance by a Party. The Parties shall keep track of any non-routine maintenance performed by their employees each calendar year. The cost of non-routine maintenance shall be calculated at $40.00 per hour of employee time plus actual expenses. By January 31 of each year, the Parties shall compare costs, and any balance owing over $100 shall be paid by the other Party. Any balance under $100 shall be forgiven for that calendar year.

D. Records. Each Party shall maintain written records of all maintenance which shall be open to inspection by the other Parties.

VI. Storage and Transportation.

A. Storage. Each Party shall be responsible for securely storing the DuraPatcher in a safe, enclosed location while in that Party's possession and not in use.

B. Transportation. Each Party shall be responsible for transporting the DuraPatcher to its city.

C. Host City: Each Party will take turns hosting storage of the DuraPatcher on a yearly basis. Host City will be responsible for inspection upon return from each Party.

VII. Employees and Workers' Compensation.

A. Employees. The Parties shall allow only properly trained employees to operate the DuraPatcher. The DuraPatcher may only be used for its intended purposes.

B. Workers' Compensation. Each Party shall be responsible for injuries or death of its own personnel while they are operating, maintaining or otherwise utilizing the DuraPatcher pursuant to this Agreement. Each Party will maintain workers' compensation insurance or self-insurance coverage on its employees. The Parties waive the right to sue the other Party for any workers' compensation benefits paid to its own employees or their dependents, even if the injuries were caused wholly or partially by the negligence of the other Party or its officers, employees, or agents.

VIII. Insurance. The Parties shall maintain the following insurance coverages.

A. Property Insurance. City A shall insure the DuraPatcher for its replacement cost. City B and City C shall reimburse City A for one-third each, of the cost of such insurance. All Parties shall be listed as loss payees. Any deductible shall be borne equally by all Parties. Any insurance proceeds shall be used to repair or replace the DuraPatcher, or divided equally by the Parties.

B. Liability Insurance. All Parties shall maintain liability insurance covering their use of the DuraPatcher. The Parties shall name the other Parties as an additional insured for purposes of liability claims that may arise under this Agreement. The Parties agree to maintain liability coverage for at least three years following the termination of this Agreement.

IX. Indemnification.

A. Hold Harmless. Each Party shall be liable for its own acts to the extent provided by law and hereby agrees to defend, indemnify and hold harmless the other Parties, and its officers, employees and agents, against any and all liability, loss, costs, damages, expenses, claims or actions, including reasonable attorneys' fees, which the other Parties may hereafter sustain, incur or be required to pay, arising out of or by reason of any act or omission of the indemnifying Party, and its officers, employees or agents, in the execution or performance or failure to adequately perform its obligations pursuant to this Agreement. Nothing in this Agreement shall require a Party to defend, indemnify or hold harmless the other Party for the other Party's own acts or omissions.

B. Liability Limits. It is understood and agreed that the Parties' liability shall be limited by the provisions of Minnesota Statutes, chapter 466, and/or other applicable law. The hold harmless provision of this Agreement does not constitute a waiver by any Party of any limitations on liability provided under Minnesota Statutes, section 466.04, as amended. To the fullest extent permitted by law, actions by the Parties pursuant to this Agreement are intended to be and shall be construed as a "cooperative activity" and it is the intent of the Parties that they shall be deemed a "single governmental unit" for the purposes of liability, all as set forth in Minnesota Statutes, section 471.59, subdivision 1a(a) as amended. Each Party to this Agreement expressly declines responsibility for the acts or omissions of the other Party. Each Party agrees to promptly notify the other Party if it knows or becomes aware of any facts or allegations reasonably giving rise to actual or potential liability, claims, causes of action, judgments, damages, losses, costs or expenses, involving or reasonably likely to involve the other Party, and arising out of acts or omissions related to this Agreement.

X. Dispute Resolution. The Parties agree that their Public Works Directors, or designees, shall meet informally to resolve any disputes. If a mutual resolution cannot be reached, the Parties shall select an independent mediator to resolve the dispute.

XI. Withdrawal. A Party may withdrawal from this Agreement upon 12 (twelve) months' written notice given to the other Party. Only the governing body of a Party may decide to withdrawal from this Agreement. The withdrawing Party will not be compensated for money invested and will forfeit their rights to use the DuraPatcher.

XII. Disposition of DuraPatcher. All Parties may agree to dispose of the DuraPatcher at any time. If the DuraPatcher is sold or traded in on a new piece of equipment, each Party shall be entitled to one-third (1/3) of the proceeds less any selling expenses or one-third (1/3) of the trade-in val

XIII. General Provisions.

A. Entire Agreement. This Agreement supersedes any prior or contemporaneous representations or agreements, whether written or oral, between the Parties and contains the entire agreement.

B. Amendments. Any modification or amendment to this Agreement shall require a written agreement signed by both Parties.

C. Governing Law. This Agreement shall be governed by and interpreted in accordance with the laws of the State of Minnesota. All proceedings related to this Agreement shall be venued in Olmsted County, Minnesota.

D. Government Data/Privacy. Each Party, its employees, officials and agents, agree to abide by the provisions of the Minnesota Government Data Practices Act, Minnesota Statutes, chapter 13, and all other applicable state and federal laws, rules, regulations and orders relating to data privacy or confidentiality, and as any of the same may be amended.

E. Waiver. The waiver by either of the Parties of any breach or failure to comply with any provision of this Agreement by the other Parties shall not be construed as, or constitute a continuing waiver of such provision or a waiver of any other breach of or failure to comply with any other provision of this Agreement.

F. Notices. All notices and other communications pursuant to this Agreement must be in writing and must be given by registered or certified mail, postage prepaid, or delivered by hand at the addresses set forth below:

Notice to City A:
City of Stewartville
105 E 1st St.
Stewartville, MN 55976

Notice to City B:
City of Chatfield
21 2nd St. SE
Chatfield, MN 55923

Notice to City C:
City of Lanesboro
202 Parkway S
Lanesboro, MN 55949

G. Savings Clause. If any court finds any portion of this Agreement to be contrary to law, invalid, or unenforceable, the remainder of the Agreement will remain in full force and effect.

H. Counterparts. This Agreement may be signed in counterparts, each of which shall be deemed an original, and which taken together shall be deemed to be one and the same document.

I. Effective Date. This Agreement is effective on the date last executed by one of the Parties below.

IN WITNESS WHEREOF, the City has caused this Agreement to be signed by its Mayor and City Clerk.

Dated: _____

CITY OF STEWARTVILLE, MINNESOTA

By: _____
Its Mayor

By: _____
Its City Clerk

IN WITNESS WHEREOF, the City has caused this Agreement to be signed by its Mayor and City Clerk.

Dated: _____

CITY OF CHATFIELD, MINNESOTA

By: _____
Its Mayor

By: _____
Its City Clerk

IN WITNESS WHEREOF, the City has caused this Agreement to be signed by its Mayor and City Clerk.

Dated: _____

CITY OF LANESBORO, MINNESOTA

By: _____
Its Mayor

By: _____
Its City Clerk

MnDOT Contract Number: 1057642a01

AMENDMENT # 01 TO MnDOT Partnership Contract #: 1057642.

Contract Start Date: 11/12/2024

Orig. Contract Exp. Date: 12/31/2028

Amended Exp. Date: 12/31/2028

Project Identification: Design and Construction Engineering Services for Reconstruction of TH 250 in Lanesboro, MN

State Project (SP): 2319-21

Trunk Highway #: 250

This amendment is by and between the State of Minnesota, through its Commissioner of Transportation ("State") and the City of Lanesboro acting through its City Council ("Customer") located at 202 Parkway Avenue South, Lanesboro, MN 55949.

Recitals

1. The State has a contract with the Customer identified as MnDOT Contract No. 1057642 ("Original Contract") to provide the preliminary design, environmental documentation, detail design, construction plans, and acquires all required right-of-way for State Project 2319-21 ("Project").
2. The Original Contract requires the Customer to acquire all necessary right-of-way for the Project at no cost to the State;
3. The parties desire to amend the Contract so that MnDOT may pay landowners directly for the acquisition of required permanent and temporary right-of-way interests, while the Customer continues to perform all right-of-way acquisition work.
4. The State and the Customer are willing to amend the Original Contract as stated below.

Contract

In this Amendment deleted contract terms will be struck out and the added contract terms will be underlined.

REVISION 1. Article 1.3 is amended as follows

1.3 **Exhibits**: Exhibits A ~~and B~~ through C are attached and incorporated into this Contract.

REVISION 2. Article 2.1 is amended as follows

2.1 MnDOT will Provide:

2.1.1 Provide periodic reviews and approve the Customer provided preliminary design, environmental document, detail design, construction plans, and right of way acquisition for the Project; and

2.1.2 Prepare a cooperative construction agreement for the parties to enter at the time the final plans are submitted for state approval~~.~~; and

2.1.3 As part of its oversight responsibility, MnDOT will review and approve all ROW valuation and acquisition recommendations and will issue payments directly to landowners as described in Article 2.2.8.

REVISION 3. Article 2.2 is amended as follows:

2.2.4 Pay, at no cost or expense to the State, all the cost for the preliminary design, environmental document, detail design, construction plans, and right of way acquisition services, excluding payment of parcels in Exhibit C, for the project provided under this contract;

REVISION 4. Article 2.2 is amended as follows:

2.2.8 Direct Payment for Right-of-Way Acquisition by MnDOT:

a. The Customer will perform all right-of-way acquisition work required for the Project as listed in Exhibit C, including but not limited to title investigation, appraisal coordination, making offers, negotiating with landowners, securing conveyance documents, and conducting closing activities, consistent with MnDOT's Right-of-Way Manual and applicable State and Federal law.

b. Upon MnDOT's review and approval of the Customer's recommended offer amount for each parcel, MnDOT will issue payment directly to the affected landowner for the acquisition of the permanent or temporary property interest.

c. The Customer will coordinate with MnDOT to obtain MnDOT approval of all appraisals, offer letters, administrative settlements, legal descriptions, and conveyance documents before presenting offers to landowners.

d. After completion of each transaction, the Customer will provide MnDOT with copies of all executed and recorded conveyance documents and closing statements.

e. The Customer will not invoice MnDOT directly for any right-of-way acquisition costs. MnDOT will reimburse any costs incurred by the Customer for MnDOT parcels not listed in Exhibit C in a subsequent Construction Cooperative Agreement between the Parties. This amendment does not create a financial encumbrance or change the payment structure described in Article 3 of the Original Contract.

The terms of the Original Contract are expressly reaffirmed and are incorporated by reference. Except as amended herein, the terms and conditions of the Original Contract and all previous amendments remain in full force and effect.

[THE BALANCE OF THIS PAGE HAS INTENTIONALLY BEEN LEFT BLANK]

Exhibit C

City Parcel #	Property Owner
67	Richard & Cheryl Lamon
68	Judith M Swenson
69	Brent A & Sarah A Kohn
70	Elliot & Susan Riggott
71	Darrell Hummel
72	Serdahl Investments, LLC
73	Michon Z Pingree
74	Sharon A McIntire
75	Karl M & Patricia R Knutson
76	Gregory M Theon Trust
77	Wendell John Hungerholt
78	Thomas J Lynch Life Estate
79	Carrol R Hanson Estate
80	Jerome A & Susan M Ritter
81	Jeffrey & Patricia Brogle
82	Nena Highum
83	Jeffrey L& Jule S Norby
84	Brian J & Molly B Miller
85	Aaron & Molly Gage
86	Thomas L Lynch Life Estate
87	Erik Wrede & Maria Reyes-Wrede
88	Gregory & Sheryl Qualy
88A	Gregory & Sheryl Qualy
89	Anton Semmen
90	Mike R Wombacher & Amy C McCall
91	Jessica McCabe

CUSTOMER

The Customer certifies that the appropriate person(s) have executed the contract on behalf of the Customer as required by applicable articles, bylaws, resolutions or ordinances.

By: _____

Title: _____

Date: _____

By: _____

Title: _____

Date: _____

COMMISSIONER OF TRANSPORTATION

By: _____

Date: _____

Title: _____

COMMISSIONER OF ADMINISTRATION

By: _____

Date: _____

Lawful gambling is permitted within the city if the Council, by resolution adopted by a majority of its members authorizes lawful gambling to occur, provided it is conducted in accordance with M.S. " 609.75 to 609.763, inclusive, as they may be amended from time to time; M.S. " 349.11 to 349.23, inclusive, as they may be amended from time to time, and this chapter.

' 116.07 COUNCIL APPROVAL.

Lawful gambling authorized by M.S. " 349.11 to 349.23, inclusive, as they may be amended from time to time, shall not be conducted unless approved by the Council, subject to the provisions of this chapter and state law.
Penalty, see ' 116.99

' 116.08 APPLICATION AND LOCAL APPROVAL OF PREMISES PERMITS.

(A) Any organization seeking to obtain a premises permit or renewal of a premises permit from the Board shall file with the City Administrator/Clerk an executed, complete duplicate application together with all exhibits and documents accompanying the application as filed with the Board. The application and accompanying exhibits and documents shall be filed not later than three days after they have been filed with the Board.

(B) Upon receipt of an application for issuance or renewal of a premises permit, the City Administrator/Clerk shall transmit the application to the Chief of Police, or the Sheriff of the county in which this city is located, for review and recommendation.

(C) The Chief of Police or Sheriff shall investigate the matter and make a review and recommendation to the City Council as soon as possible, but in no event later than 45 days following receipt of the notification by the city.

(D) Organizations applying for a state-issued premises permit shall pay the city a $100 investigation fee. This fee shall be refunded if the application is withdrawn before the investigation is commenced. If approved by the City Council and the Board, a licensed organization will be responsible for an annual investigative fee for conducting lawful gambling within the city.

(E) The applicant shall be notified in writing of the date on which the Council will consider the recommendation.

(F) The Council shall receive the Police Chief's or Sheriff's report and consider the application within 45 days of the date the application was submitted to the City Administrator/Clerk.

(G) The Council shall, by resolution, approve or disapprove the application within 60 days of receipt of the application.

(H) The Council shall deny an application for issuance or renewal of a premises permit for any of the following reasons:

(1) Violation by the gambling organization of any state statute, state rule or city ordinance relating to gambling within the last three years.

(2) Violation by the on-sale establishment or organization leasing its premises for gambling of any state statute, state rule or city ordinance relating to the operation of the establishment, including, but not limited to, laws relating to alcoholic beverages, gambling, controlled substances, suppression of vice, and protection of public safety within the last three years.

(3) Lawful gambling would be conducted at premises other than those for which an on-sale liquor license has been issued.

(4) Lawful gambling would be conducted at more than one premises within the city. The city may limit the number of premises where lawful gambling may be conducted.

(5) An organization would be permitted to conduct lawful gambling activities at more than one premises in the city.

(6) More than one licensed organization would be permitted to conduct lawful gambling activities at one premises.

(7) Failure of the applicant to pay any investigation fee provided by division (D) of this section within the prescribed time limit.

(8) Operation of gambling at the site would be detrimental to health, safety, and welfare of the community.

Otherwise the Council shall pass a resolution approving the application.